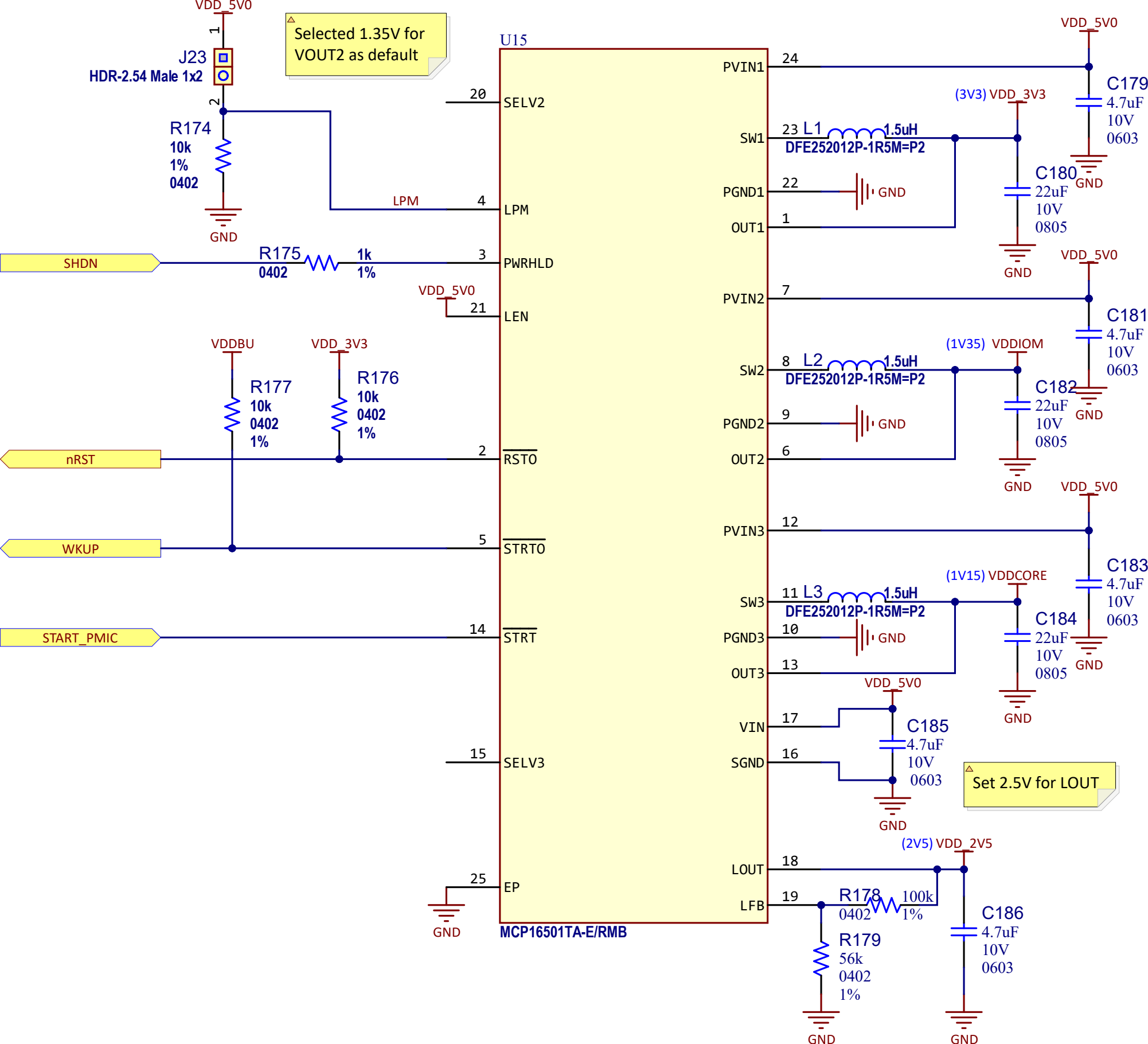
VDD_5V0
J23
HDR-2.54 Male 1x2
Selected 1.35V for VOUT2 as default
U15
R174
10k
1%
0402
GND
LPM
SHDN
R175
0402
1k
1%
VDD_5V0
VDDBU
VDD_3V3
R177
10k
0402
1%
R176
10k
0402
1%
nRST
WKUP
START_PMIC
SELV2
LPM
PWRHLD
LEN
RSTO
STRTO
STRT
SELV3
EP
MCP16501TA-E/RMB
PVIN1
SW1
PGND1
OUT1
PVIN2
SW2
PGND2
OUT2
PVIN3
SW3
PGND3
OUT3
VIN
SGND
LOUT
LFB
(3V3) VDD_3V3
L1
1.5uH
DFE252012P-1R5M=P2
C179
4.7uF
10V
0603
C180
22uF
10V
0805
(1V35) VDDIOM
L2
C181
C182
(1V15) VDDCORE
L3
C183
C184
C185
Set 2.5V for LOUT
(2V5) VDD_2V5
R178
100k
1%
R179
56k
0402
1%
C186