PIC18F56Q35

Curiosity Nano

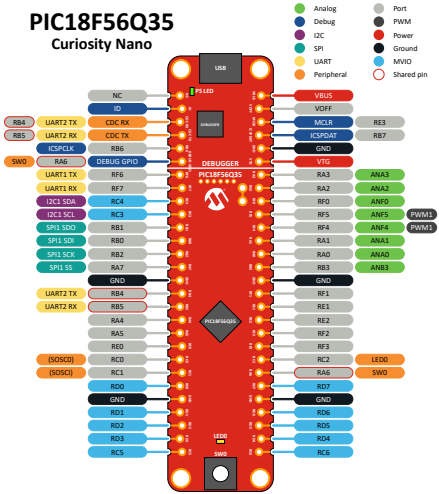

On-Board Peripherals

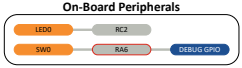

Curiosity Nano Explorer

Mapping

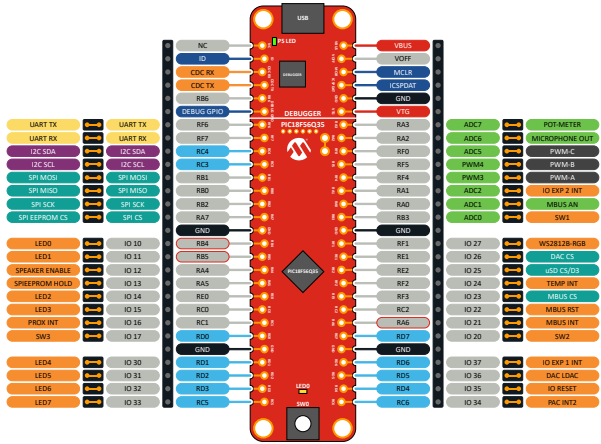

mikroBUS™
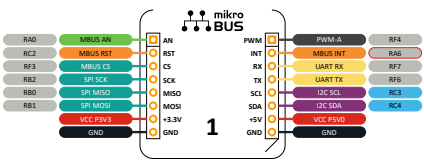
Socket