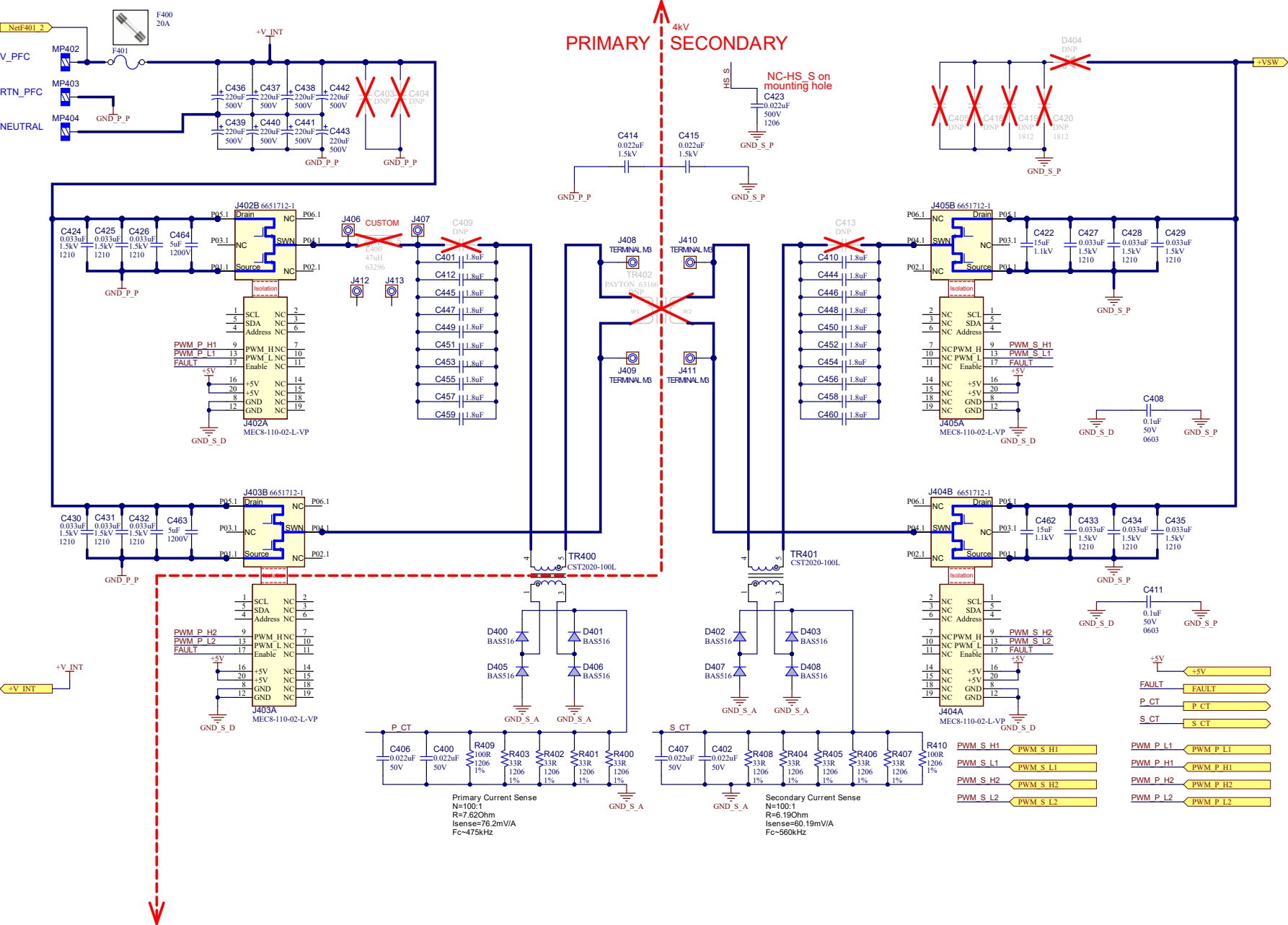
PRIMARY
SECONDARY
4kV
NetF401_2
V_PFC
RTN_PFC
NEUTRAL
MP402
MP403
MP404
F400
20A
F401
+V_INT
GND_P_P
C436 220uF 500V
C437 220uF 500V
C438 220uF 500V
C442 220uF 500V
C439 220uF 500V
C440 220uF 500V
C441 220uF 500V
C443 220uF 500V
C403 DNP
C404 DNP
C414 0.022uF 1.5kV
C415 0.022uF 1.5kV
GND_S_P
HS_S
NC-HS_S on mounting hole
C423 0.022uF 500V 1206
D404 DNP
C405 DNP
C418 DNP
C419 DNP 1812
C420 DNP 1812
+VSW
J402B 6651712-1
J405B 6651712-1
J403B 6651712-1
J404B 6651712-1
Drain
SWN
Source
NC
Isolation
C424 0.033uF 1.5kV 1210
C425 0.033uF 1.5kV 1210
C426 0.033uF 1.5kV 1210
C464 5uF 1200V
C422 15uF 1.1kV
C427 0.033uF 1.5kV 1210
C428 0.033uF 1.5kV 1210
C429 0.033uF 1.5kV 1210
C430 0.033uF 1.5kV 1210
C431 0.033uF 1.5kV 1210
C432 0.033uF 1.5kV 1210
C463 5uF 1200V
C462 15uF 1.1kV
C433 0.033uF 1.5kV 1210
C434 0.033uF 1.5kV 1210
C435 0.033uF 1.5kV 1210
J406
CUSTOM
J407
C409 DNP
J412
J413
J408 TERMINAL M3
J410 TERMINAL M3
TR402 PAYTON_63166 DNP
J409 TERMINAL M3
J411 TERMINAL M3
C413 DNP
C410 1.8uF
C444 1.8uF
C446 1.8uF
C448 1.8uF
C450 1.8uF
C452 1.8uF
C454 1.8uF
C456 1.8uF
C458 1.8uF
C460 1.8uF
C401 1.8uF
C412 1.8uF
C445 1.8uF
C447 1.8uF
C449 1.8uF
C451 1.8uF
C453 1.8uF
C455 1.8uF
C457 1.8uF
C459 1.8uF
SCL
SDA
Address
PWM_H
PWM_L
Enable
+5V
GND
PWM_P_H1
PWM_P_L1
FAULT
PWM_S_H1
PWM_S_L1
PWM_P_H2
PWM_P_L2
PWM_S_H2
PWM_S_L2
J402A
J405A
J403A
J404A
MEC8-110-02-L-VP
GND_S_D
C408 0.1uF 50V 0603
C411 0.1uF 50V 0603
TR400 CST2020-100L
TR401 CST2020-100L
D400 BAS516
D401 BAS516
D405 BAS516
D406 BAS516
D402 BAS516
D403 BAS516
D407 BAS516
D408 BAS516
GND_S_A
P_CT
S_CT
C406 0.022uF 50V
C400 0.022uF 50V
R409 100R 1206 1%
R403 33R 1206 1%
R402 33R 1206 1%
R401 33R 1206 1%
R400 33R 1206 1%
C407 0.022uF 50V
C402 0.022uF 50V
R408 33R 1206 1%
R404 33R 1206 1%
R405 33R 1206 1%
R406 33R 1206 1%
R407 33R 1206 1%
R410 100R 1206 1%
Primary Current Sense
N=100:1
R=7.62Ohm
Isense=76.2mV/A
Fc~475kHz
Secondary Current Sense
N=100:1
R=6.19Ohm
Isense=60.19mV/A
Fc~560kHz
+5V
FAULT
P_CT
S_CT
PWM_S_H1
PWM_S_L1
PWM_S_H2
PWM_S_L2
PWM_P_L1
PWM_P_H1
PWM_P_H2
PWM_P_L2