DEBUGGER

TARGET ADJUSTABLE REGULATOR

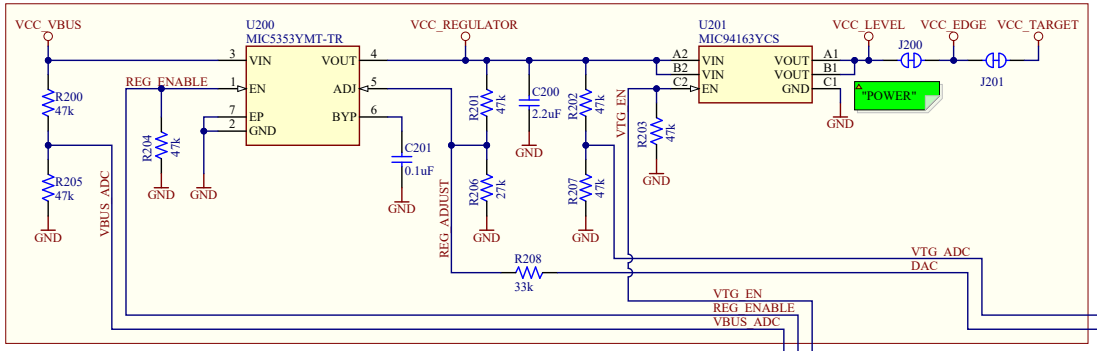

J200:
- Cut-strap used for full separation of target power from the level shifters and on-board regulators.
- For current measurements using an external power supply, this strap could be cut for more accurate measurements. Leakage back through the switch is in the micro ampere range.
J201:
- For current measurements using the on-board power supply, this strap must be cut and an ammeter connected across.

MIC5353:
Vin: 2.6V to 6V
Vout: 1.25V to 5.1V
Imax: 500mA
Dropout (typical): 50mV@150mA, 160mV @ 500mA
Accuracy: 2% initial
Thermal shutdown and current limit

Maximum output voltage is limited by the input voltage and the dropout voltage in the regulator.

Signal \ Interface	ICSP TARGET	UPDI TARGET	SWD TARGET
CDC TX	UART RX	UART RX	UART RX
CDC RX	UART TX	UART TX	UART TX
DBG0	DAT	UPDI	SWDAT
DBG1	CLK	GPIO	SWCLK
DBG2	GPIO	GPIO	SWO/GPIO
DBG3	$\overline{MCLR}$	$\overline{RESET}$	$\overline{RESET}$
VCC	-	-	-

ADJUSTABLE OUTPUT AND LIMITATIONS:
- The DEBUGGER can adjust the output voltage of the regulator between 1.25V and 5.1V to the target.
- The voltage output is limited by the input (USB), which can vary between 4.40V to 5.25V
- The level shifters have a minimal voltage level of 1.65V and will limit the minimum operating voltage allowed for the target to still allow communication.
- The MIC94163 has a minimal volatege level of 1.70V and will limit the minimum voltage delivered to the target.
- Firmware configuration will limit the voltage range to be within the the target specification.

DBG3 OPEN DRAIN

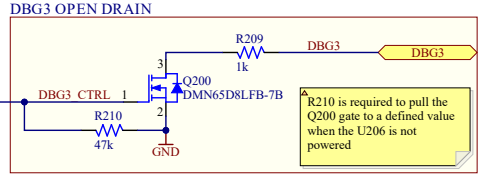

R210 is required to pull the Q200 gate to a defined value when the U206 is not powered

VBUS SLEW RATE- & CURRENT-LIMIT

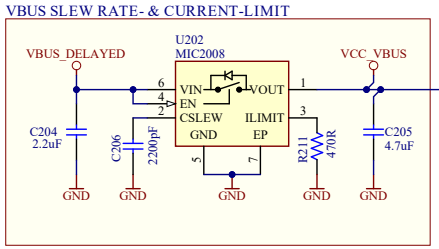

SLEW RATE LIMIT:
- With C206 set to 2200pF, the slew rate of VCC_VBUS is limited to 2 V/ms by the power switch MIC2008.

CURRENT LIMIT:
- With R211 set to 470ohm, the current through the power switch MIC2008 is limited to 500mA.

DEBUGGER REGULATOR

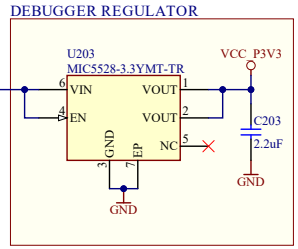

MIC5528:
Vin: 2.5V to 5.5V
Vout: Fixed 3.3V
Imax: 500mA
Dropout: 260mV @ 500mA

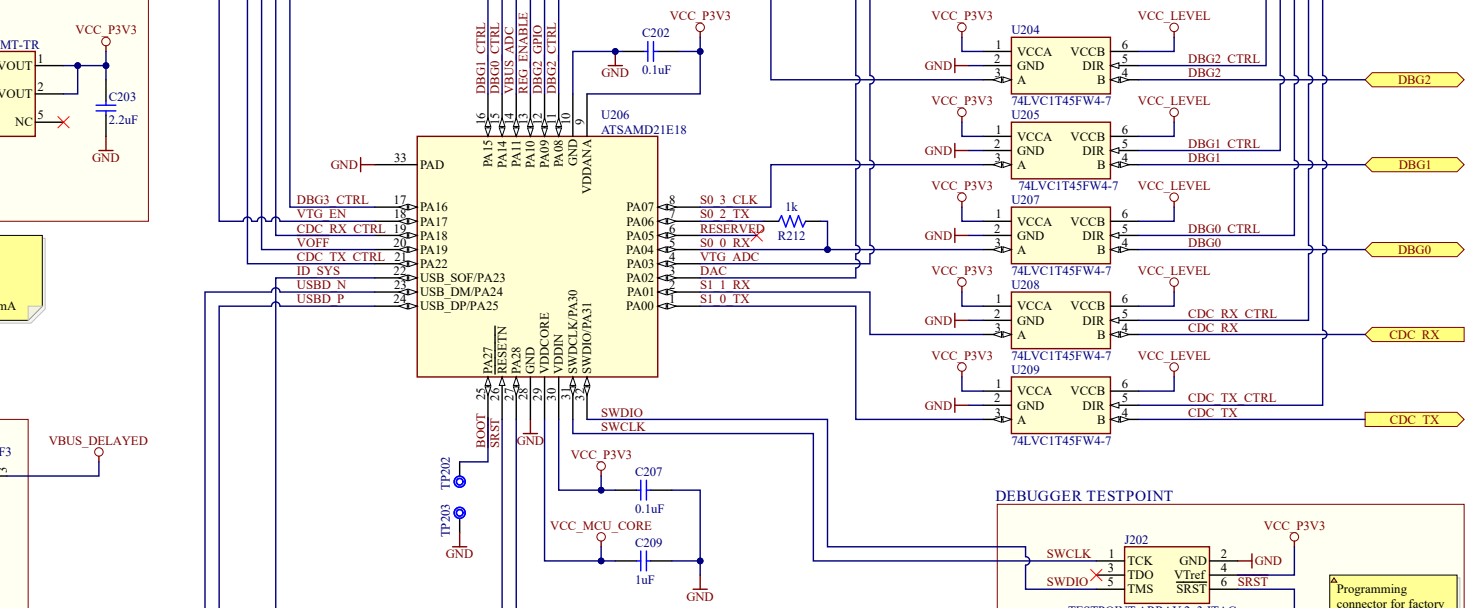

VBUS START-UP DELAY

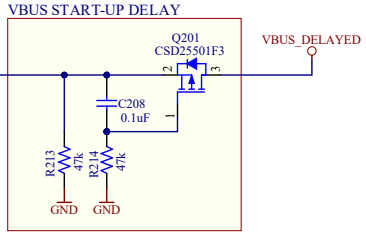

START-UP DELAY::
- With C208 set to 0.1uF and R214 set to 47kohm, the P-MOS is delaying the turn-on of VCC_DELAYED by 1ms, compared to VBUS.

DEBUGGER USB-C CONNECTOR

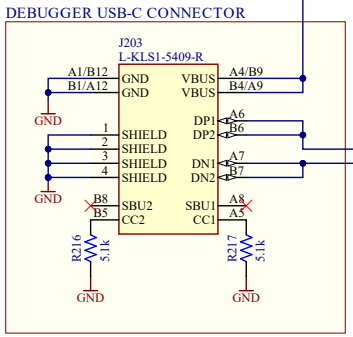

TP200
TP201
"GND"

TP200 and TP201 are MTG Holes in the corners of the PCB in the DEBUGGER section labelled "GND" on the silkscreen.

TP200 and TP201 are MTG Holes in the corners of the PCB in the DEBUGGER section labelled "GND" on the silkscreen.

DEBUGGER TESTPOINT

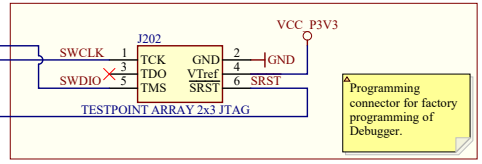

Programming connector for factory programming of Debugger.

DEBUGGER POWER/STATUS LED

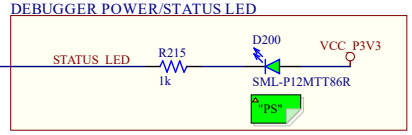

ID PIN

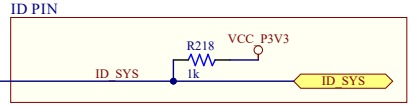

CNANO Template Revision: 2.3

Project Owner: ST			
PCB Layout Contact: TF			
PartNumber: EV73T25A	Project Title: PIC18F 16Q20 Curiosity Nano	Variant: Default Assembly	
Sheet Title: Debugger			
Size: A3	SCH #: 02-00457	Rev: 3	Date: 18.09.2023
	PCB #: 04-11563	Rev: 3	Sheet 4 of 4

File: PIC18F16Q20_Curiosity_Nano_Debugger.SchDoc

Designed with Altium — Altium.com