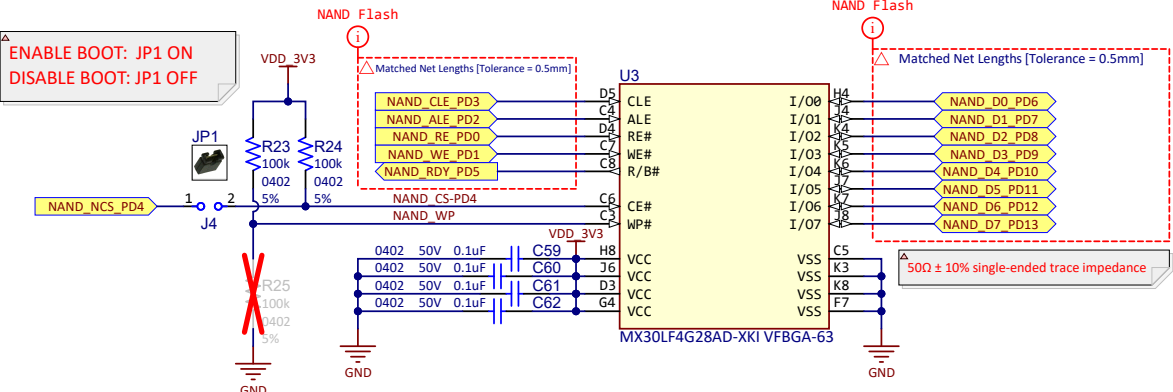
ENABLE BOOT: JP1 ON
DISABLE BOOT: JP1 OFF
NAND_Flash
VDD_3V3
JP1
R23
100k
0402
5%
R24
100k
0402
5%
NAND_NCS_PD4
J4
R25
100k
0402
5%
GND
Matched Net Lengths [Tolerance = 0.5mm]
NAND_CLE_PD3
NAND_ALE_PD2
NAND_RE_PD0
NAND_WE_PD1
NAND_RDY_PD5
NAND_CS-PD4
NAND_WP
U3
D5 CLE
C4 ALE
D4 RE#
C7 WE#
C8 R/B#
C6 CE#
C3 WP#
H8 VCC
J6 VCC
D3 VCC
G4 VCC
I/00 H4
I/01 J4
I/02 K4
I/03 K5
I/04 K6
I/05 J7
I/06 K7
I/07 J8
VSS C5
VSS K3
VSS K8
VSS F7
MX30LF4G28AD-XKI VFBGA-63
0402 50V 0.1uF C59
0402 50V 0.1uF C60
0402 50V 0.1uF C61
0402 50V 0.1uF C62
NAND_D0_PD6
NAND_D1_PD7
NAND_D2_PD8
NAND_D3_PD9
NAND_D4_PD10
NAND_D5_PD11
NAND_D6_PD12
NAND_D7_PD13
50Ω ± 10% single-ended trace impedance