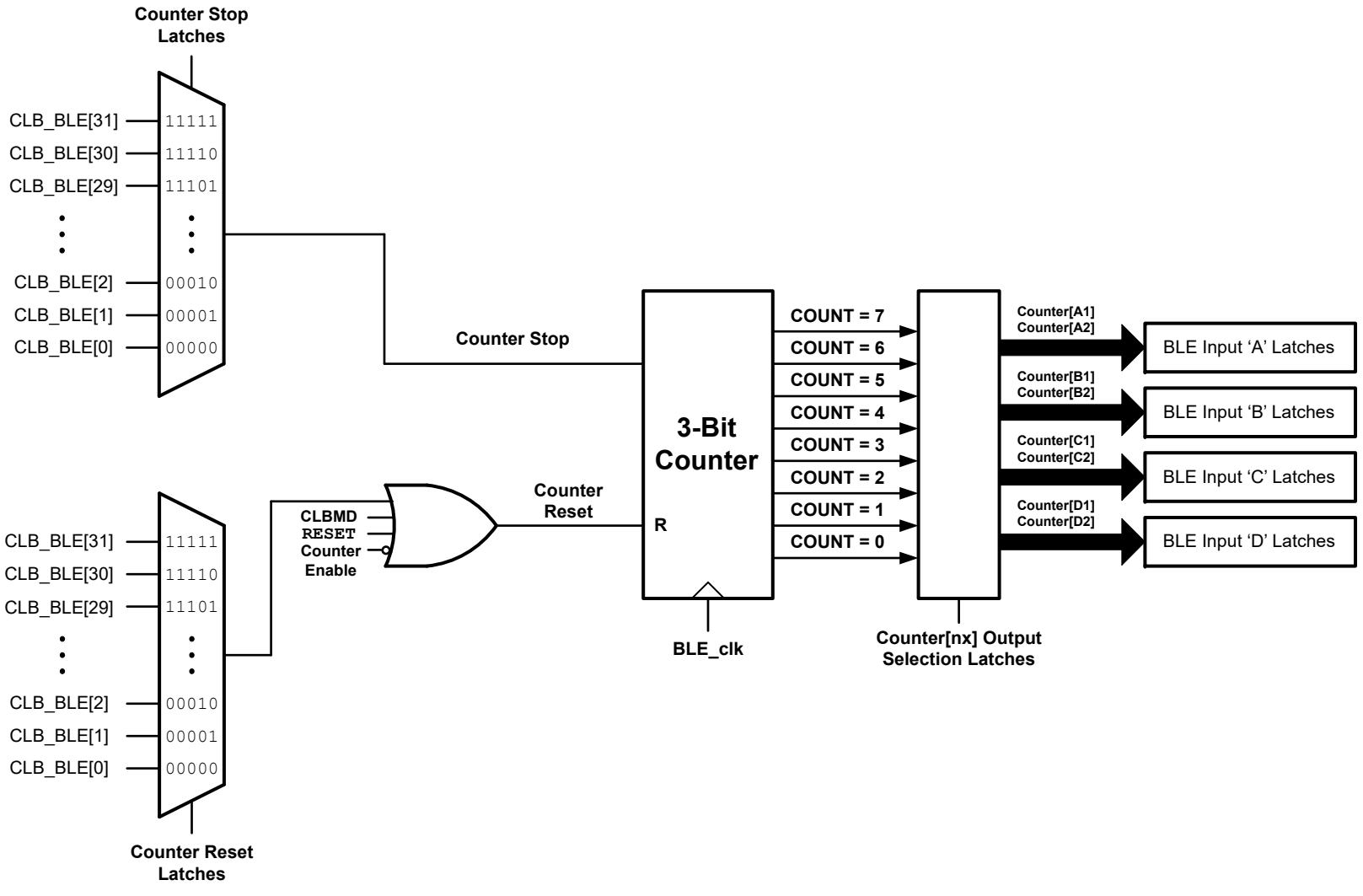
Counter Stop Latches
CLB_BLE[31]
CLB_BLE[30]
CLB_BLE[29]
CLB_BLE[2]
CLB_BLE[1]
CLB_BLE[0]
11111
11110
11101
00010
00001
00000
Counter Stop
3-Bit Counter
R
COUNT = 7
COUNT = 6
COUNT = 5
COUNT = 4
COUNT = 3
COUNT = 2
COUNT = 1
COUNT = 0
Counter[A1]
Counter[A2]
Counter[B1]
Counter[B2]
Counter[C1]
Counter[C2]
Counter[D1]
Counter[D2]
BLE Input 'A' Latches
BLE Input 'B' Latches
BLE Input 'C' Latches
BLE Input 'D' Latches
CLBMD
RESET
Counter Enable
Counter Reset
BLE_clk
Counter[nx] Output Selection Latches
CLB_BLE[31]
CLB_BLE[30]
CLB_BLE[29]
CLB_BLE[2]
CLB_BLE[1]
CLB_BLE[0]
11111
11110
11101
00010
00001
00000
Counter Reset Latches