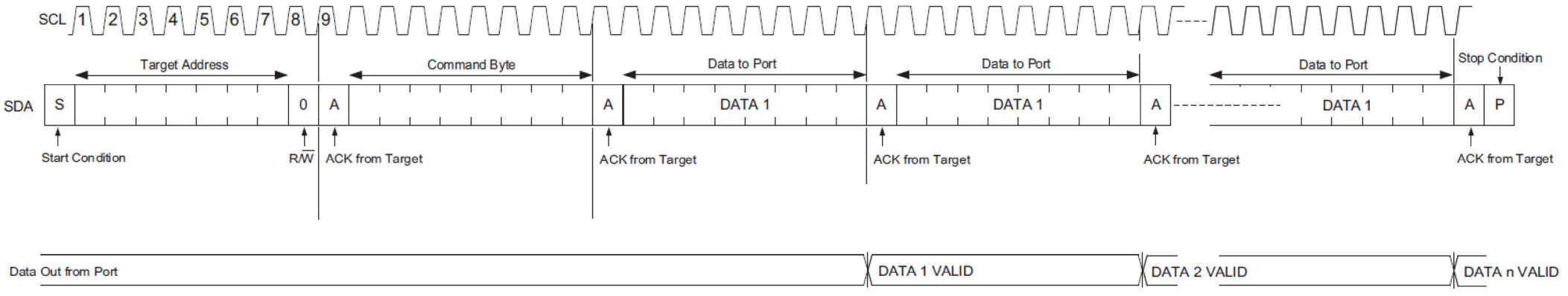
SCL
1
2
3
4
5
6
7
8
9
Target Address
Command Byte
Data to Port
Data to Port
Data to Port
Stop Condition
SDA
S
0
A
A
DATA 1
A
DATA 1
A
DATA 1
A
P
Start Condition
R/W
ACK from Target
ACK from Target
ACK from Target
ACK from Target
ACK from Target
Data Out from Port
DATA 1 VALID
DATA 2 VALID
DATA n VALID