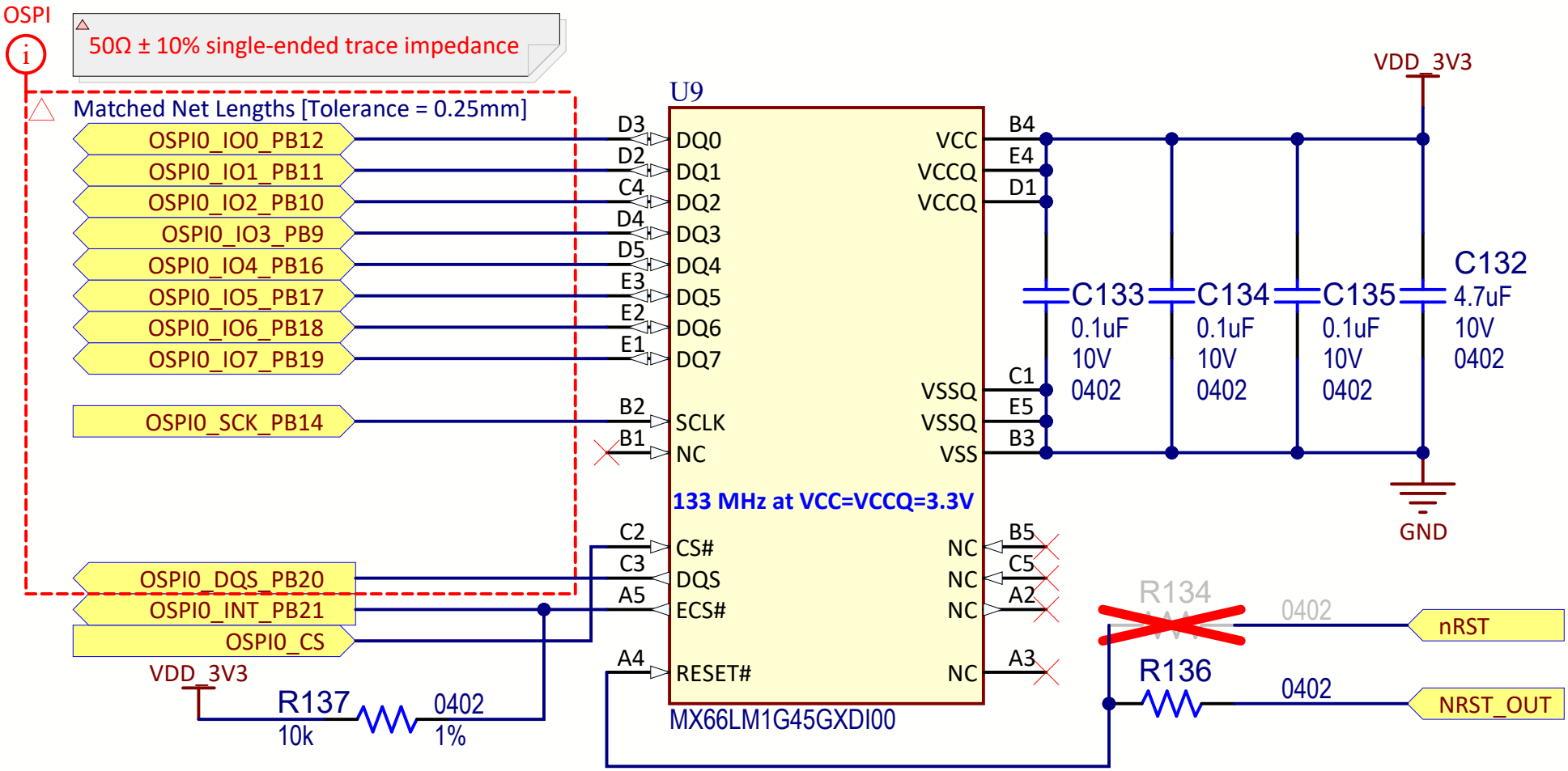Octal SPI Memory