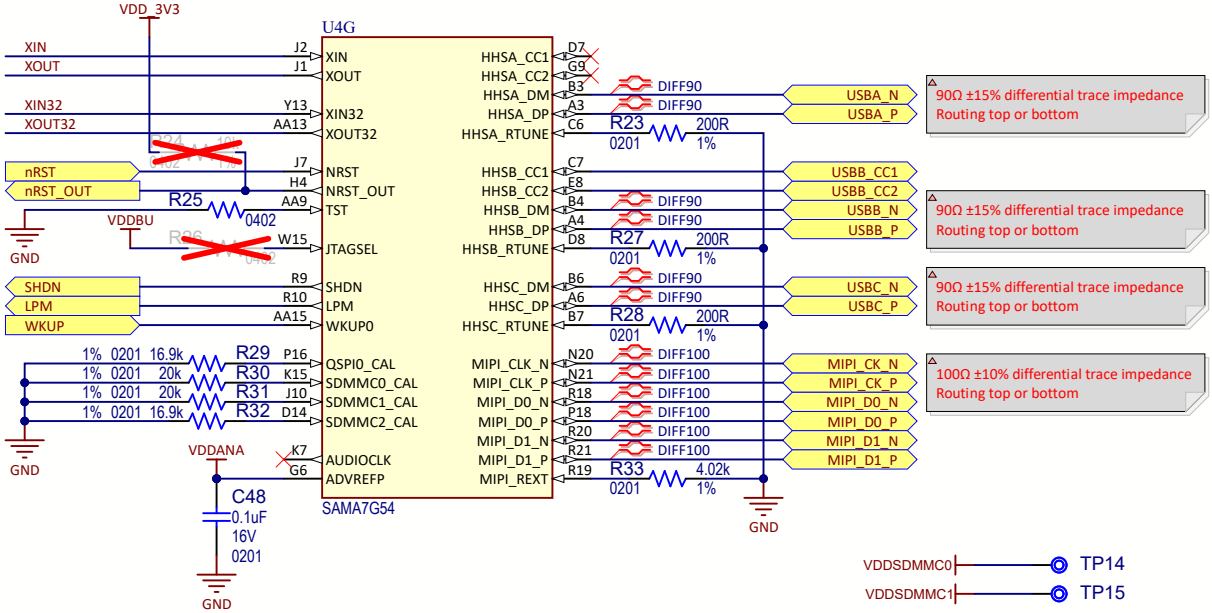MPU configuration