eMMC

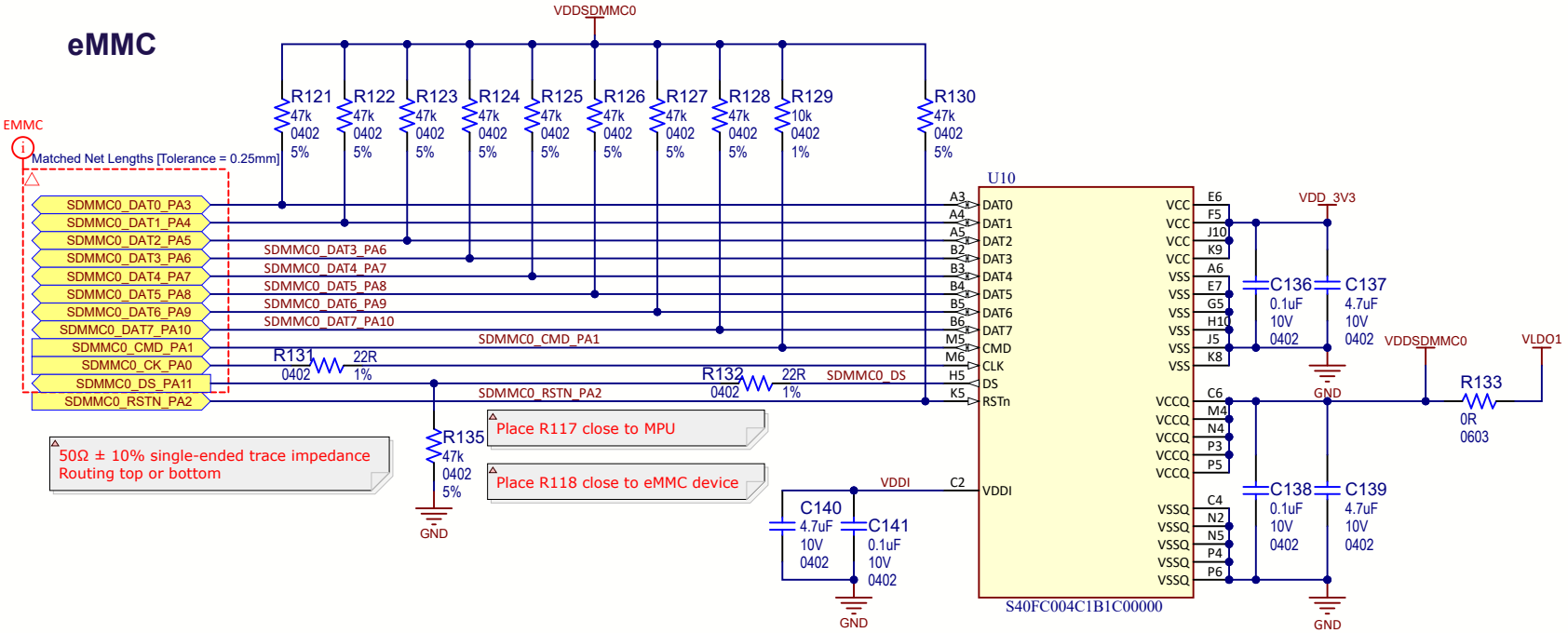
VDDSDMMC0
EMMC
Matched Net Lengths [Tolerance = 0.25mm]
R121 47k 0402 5%
R122 47k 0402 5%
R123 47k 0402 5%
R124 47k 0402 5%
R125 47k 0402 5%
R126 47k 0402 5%
R127 47k 0402 5%
R128 47k 0402 5%
R129 10k 0402 1%
R130 47k 0402 5%
SDMMC0_DAT0_PA3
SDMMC0_DAT1_PA4
SDMMC0_DAT2_PA5
SDMMC0_DAT3_PA6
SDMMC0_DAT4_PA7
SDMMC0_DAT5_PA8
SDMMC0_DAT6_PA9
SDMMC0_DAT7_PA10
SDMMC0_CMD_PA1
SDMMC0_CK_PA0
SDMMC0_DS_PA11
SDMMC0_RSTN_PA2
R131 22R 0402 1%
R132 22R 0402 1%
SDMMC0_DS
R135 47k 0402 5%
GND
Place R117 close to MPU
Place R118 close to eMMC device
50Ω ± 10% single-ended trace impedance
Routing top or bottom
U10
A3 DAT0
A4 DAT1
A5 DAT2
B2 DAT3
B3 DAT4
B4 DAT5
B5 DAT6
B6 DAT7
M5 CMD
M6 CLK
H5 DS
K5 RSTn
C2 VDDI
VCC E6 F5 J10 K9 A6
VSS E7 G5 H10 J5 K8
VCCQ C6 M4 N4 P3 P5
VSSQ C4 N2 N5 P4 P6
S40FC004C1B1C00000
VDD_3V3
C136 0.1uF 10V 0402
C137 4.7uF 10V 0402
C138 0.1uF 10V 0402
C139 4.7uF 10V 0402
VDDSDMMC0
VLDO1
R133 0R 0603
C140 4.7uF 10V 0402
C141 0.1uF 10V 0402
VDDI