# GMAC0 SODIMM

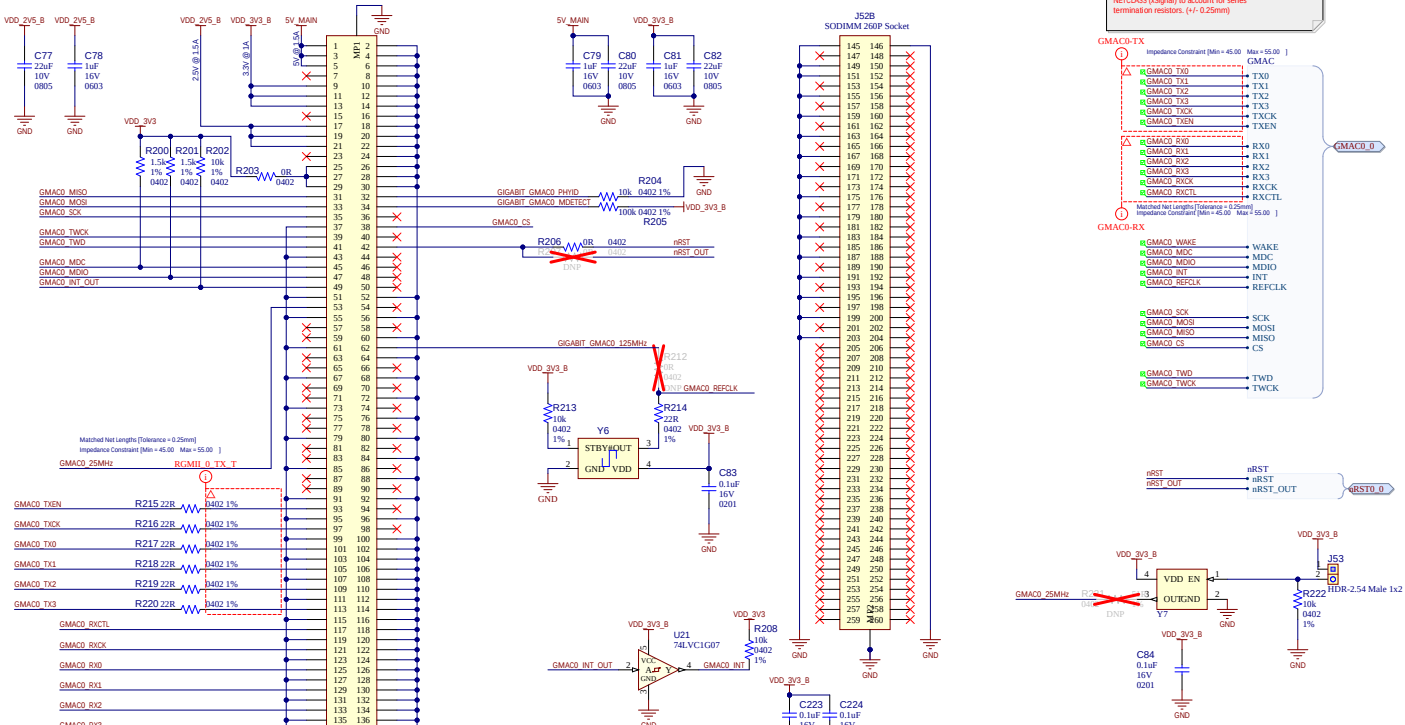


| | |
|---|---|
| Project Owner: SMS | |
| PCB Layout Contact: SMS | |
| PartNumber: 02-01213 | Project Title: SAM9X75 Curiosity Pro — Variant: Standard |
| Sheet Title: GMAC0 SODIMM | |
| Size: B — SCH #: 02-01213 — Rev: 1 — Date: 19-Nov-2025 | |
| PCB #: 04-12277 — Rev: 1 — Sheet 24 of 38 | |
| File: GMAC0-SODIMM.SchDoc | |

MICROCHIP — Designed with Altium — Altium.com