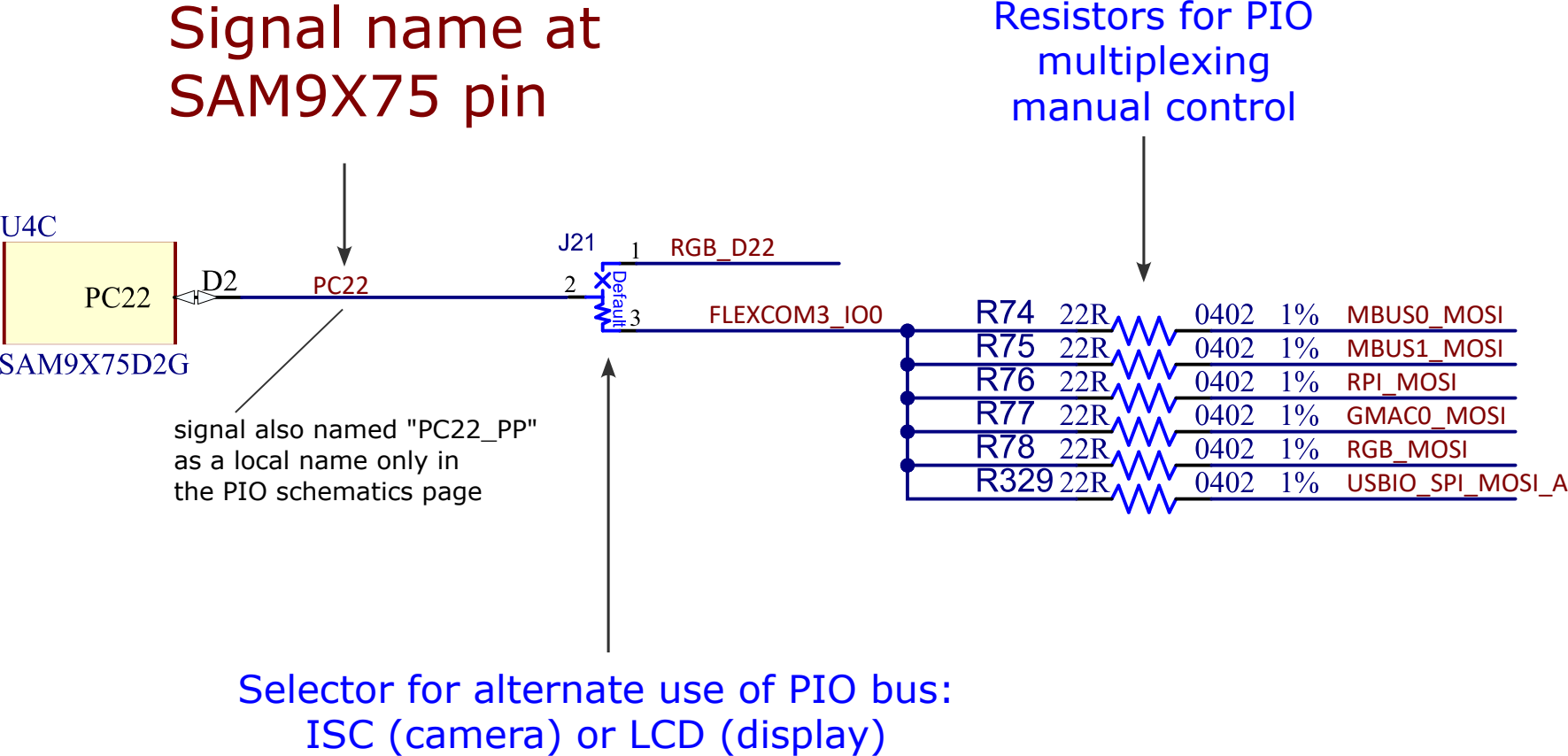
Signal name at SAM9X75 pin
Resistors for PIO multiplexing manual control
U4C
PC22
D2
SAM9X75D2G
PC22
signal also named "PC22_PP" as a local name only in the PIO schematics page
J21
1
2
3
Default
RGB_D22
FLEXCOM3_IO0
R74 22R 0402 1% MBUS0_MOSI
R75 22R 0402 1% MBUS1_MOSI
R76 22R 0402 1% RPI_MOSI
R77 22R 0402 1% GMAC0_MOSI
R78 22R 0402 1% RGB_MOSI
R329 22R 0402 1% USBIO_SPI_MOSI_A
Selector for alternate use of PIO bus: ISC (camera) or LCD (display)