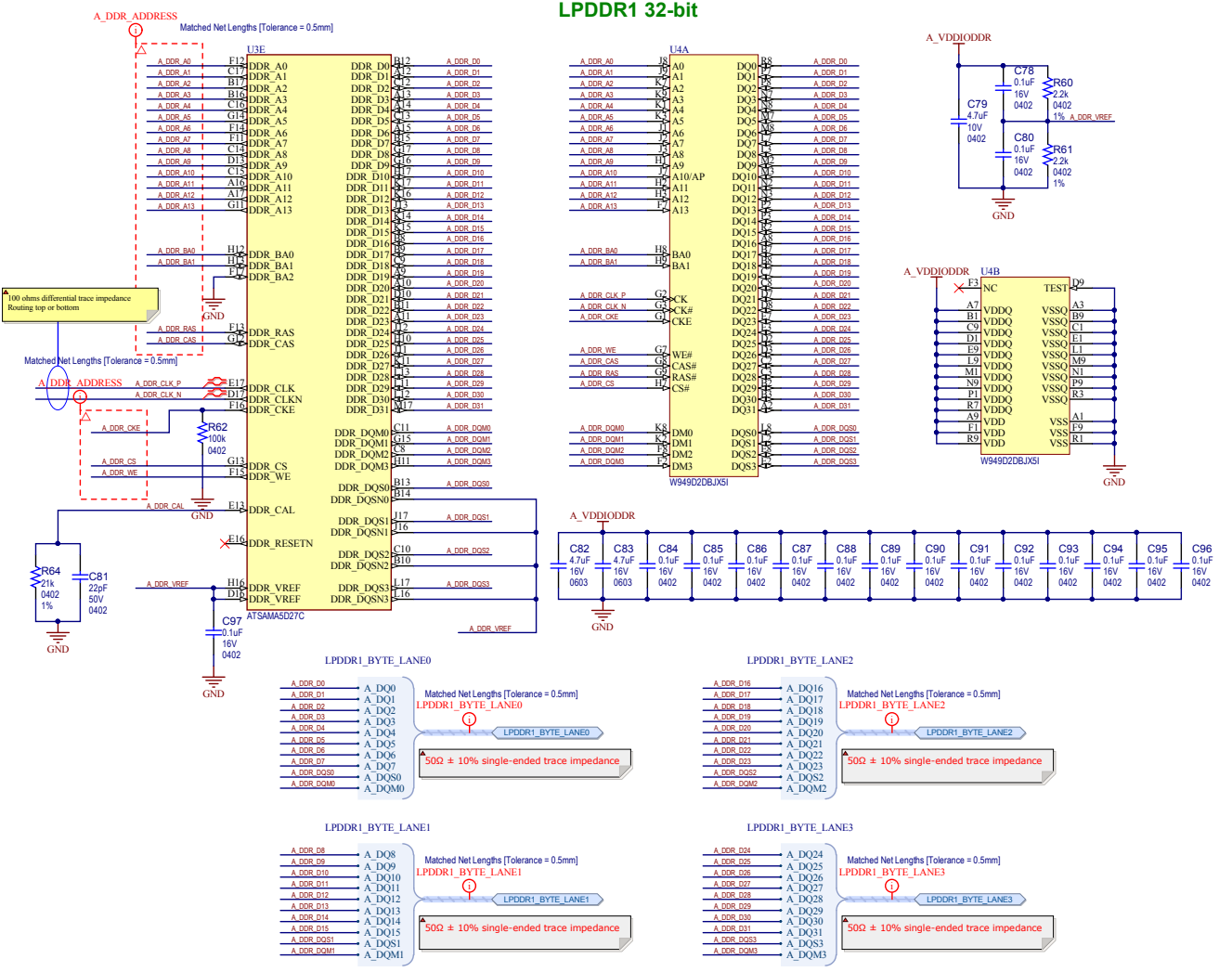LPDDR1 32-bit