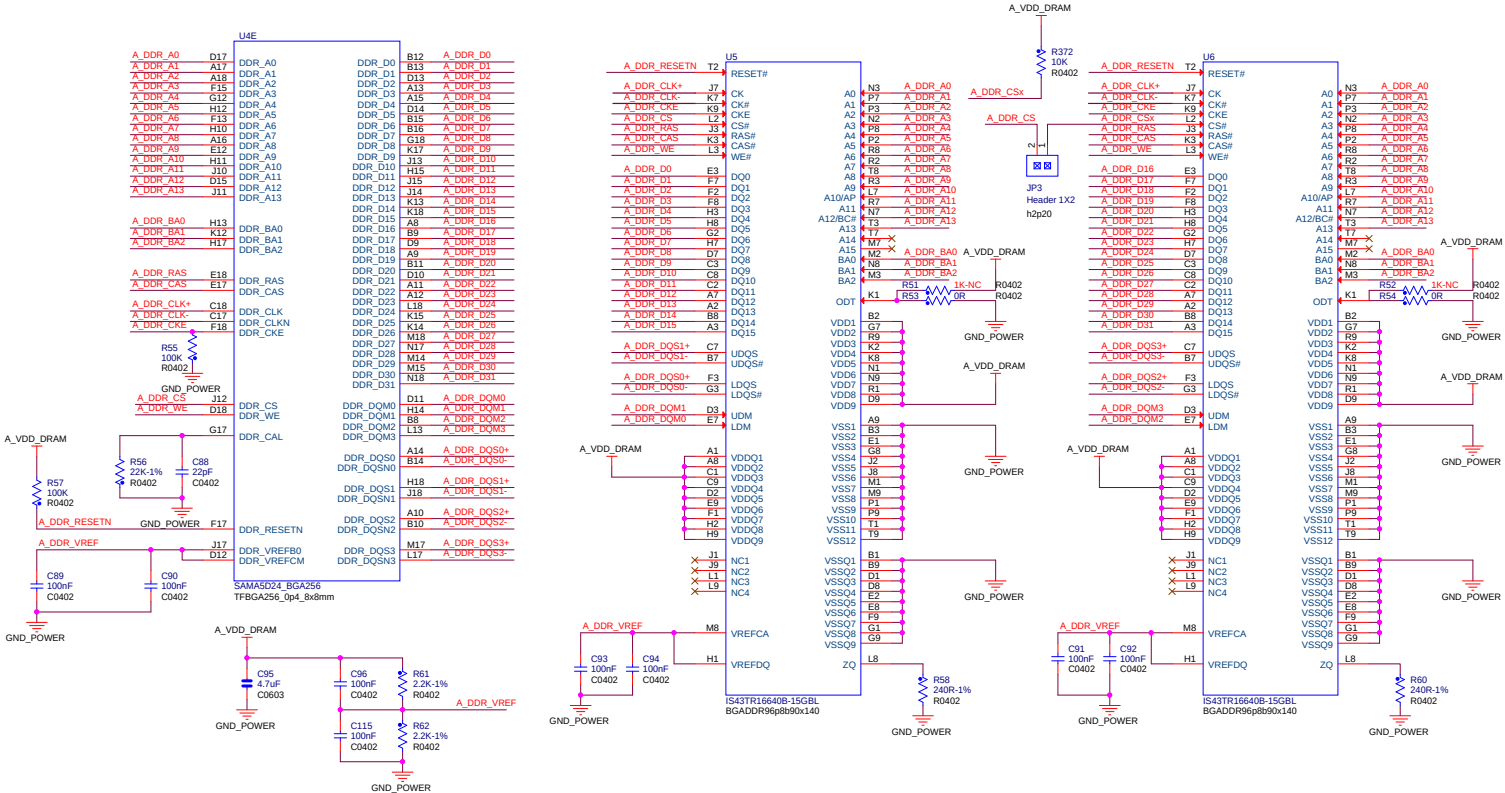
U4E
SAMA5D24_BGA256
TFBGA256_0p4_8x8mm
U5
IS43TR16640B-15GBL
BGADDR96p8b90x140
U6
IS43TR16640B-15GBL
BGADDR96p8b90x140
A_VDD_DRAM
GND_POWER
A_DDR_RESETN
A_DDR_VREF
A_DDR_CSx
A_DDR_CS
JP3
Header 1X2
h2p20
R372
10K
R0402
R55
100K
R0402
R56
22K-1%
R0402
C88
22pF
C0402
R57
100K
R0402
C89
100nF
C0402
C90
100nF
C0402
C95
4.7uF
C0603
C96
100nF
C0402
R61
2.2K-1%
R0402
C115
100nF
C0402
R62
2.2K-1%
R0402
R51
1K-NC
R53
0R
R52
1K-NC
R54
0R
R58
240R-1%
R0402
R60
240R-1%
R0402
C93
100nF
C0402
C94
100nF
C0402
C91
100nF
C0402
C92
100nF
C0402