30-Lead PCB Module (ZRX) -13.4x18.7x2.8 mm Body [MODULE] For WBZ450 With Metal Shield and Coaxial Connector

Note: For the most current package drawings, please see the Microchip Packaging Specification located at http://www.microchip.com/packaging

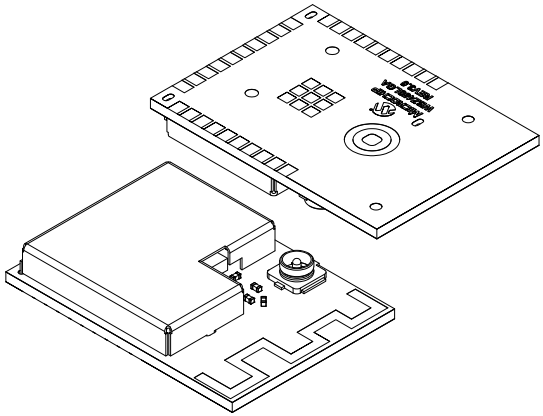

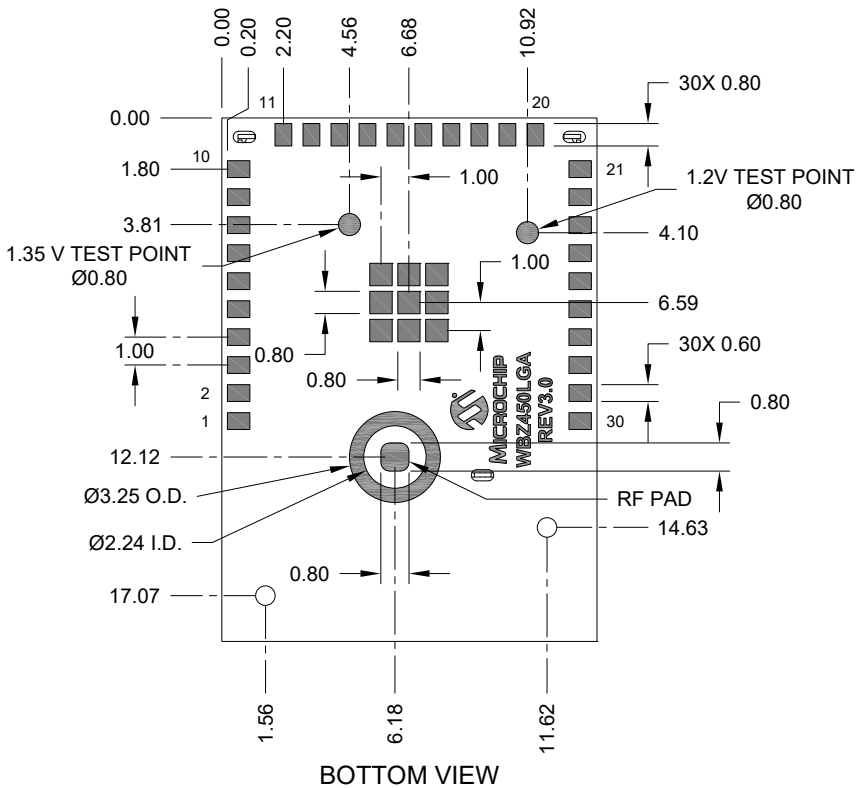

BOTTOM VIEW

Notes: