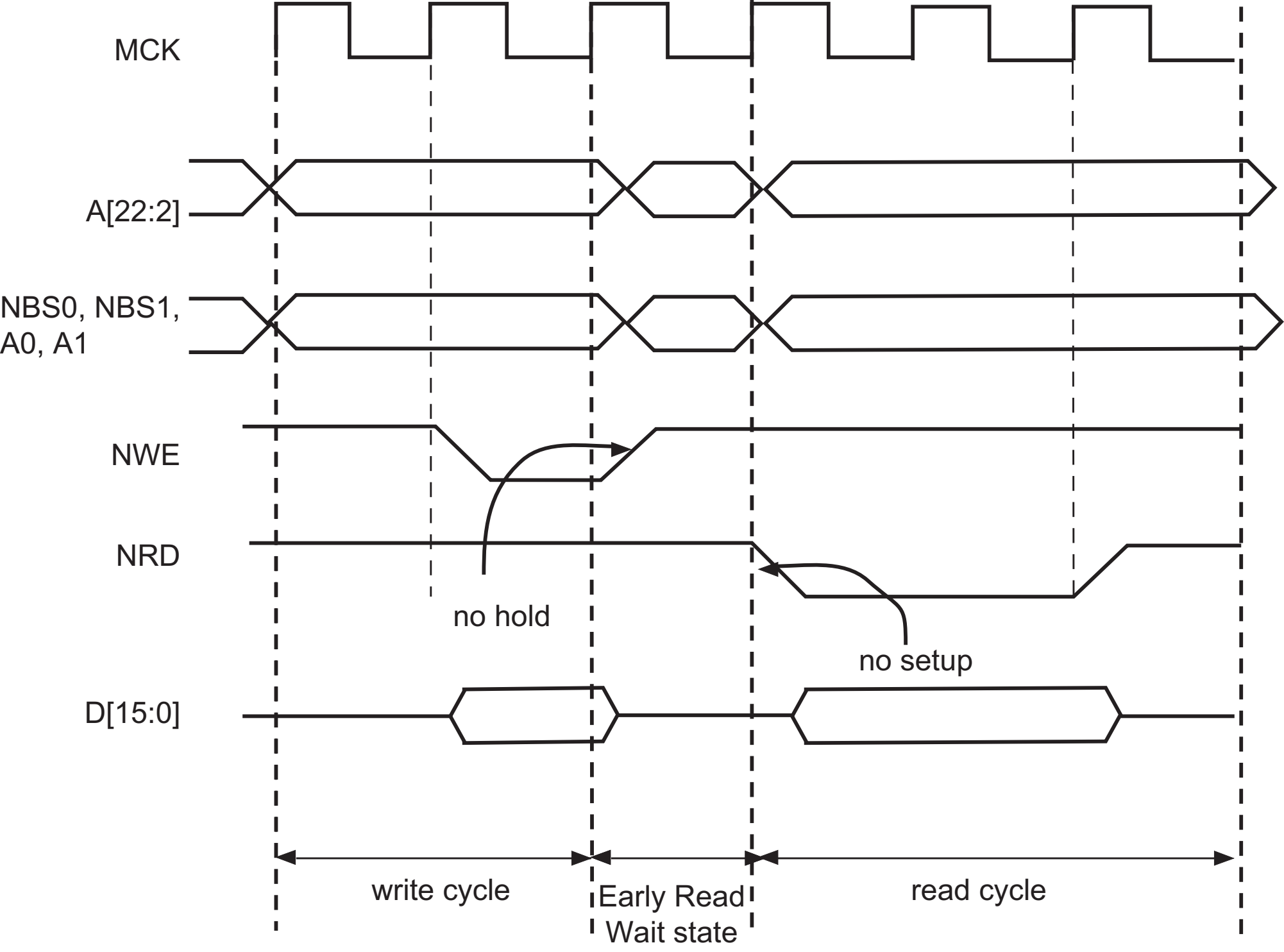
MCK
A[22:2]
NBS0, NBS1,
A0, A1
NWE
NRD
no hold
no setup
D[15:0]
write cycle
Early Read
Wait state
read cycle