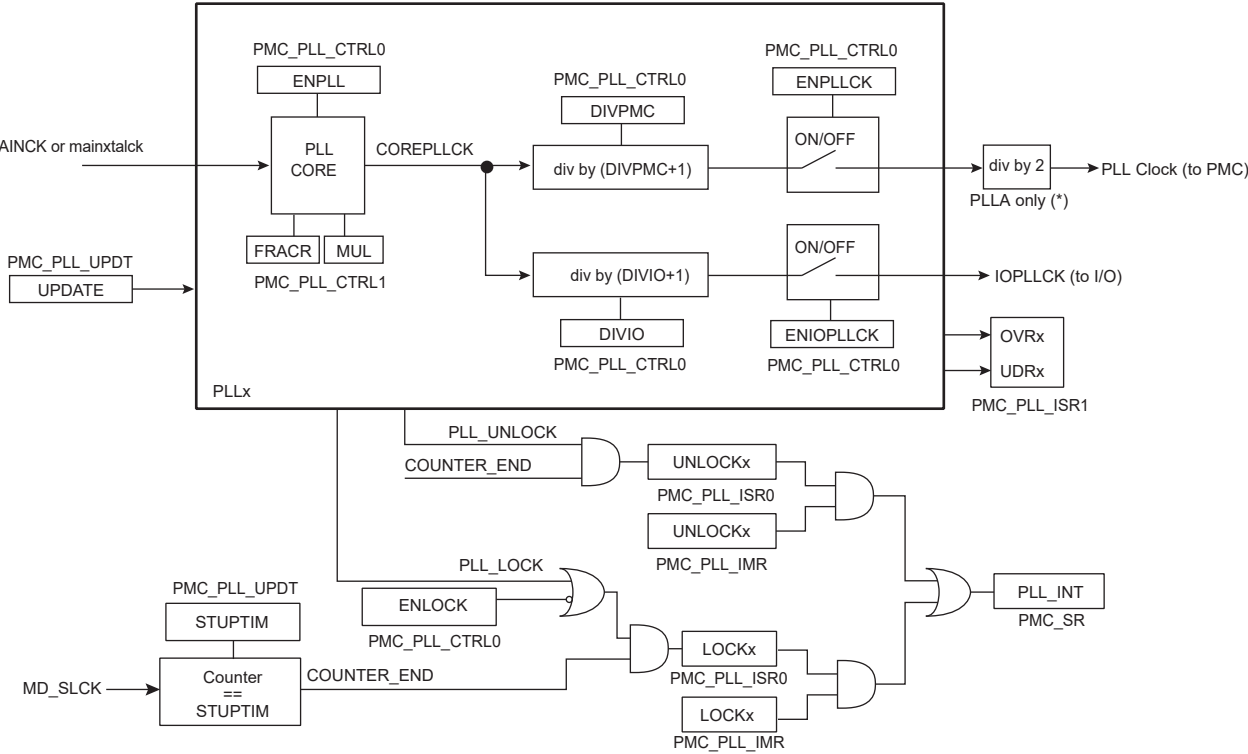

(*): This divider is only implemented at the output of PLLA (ID0).