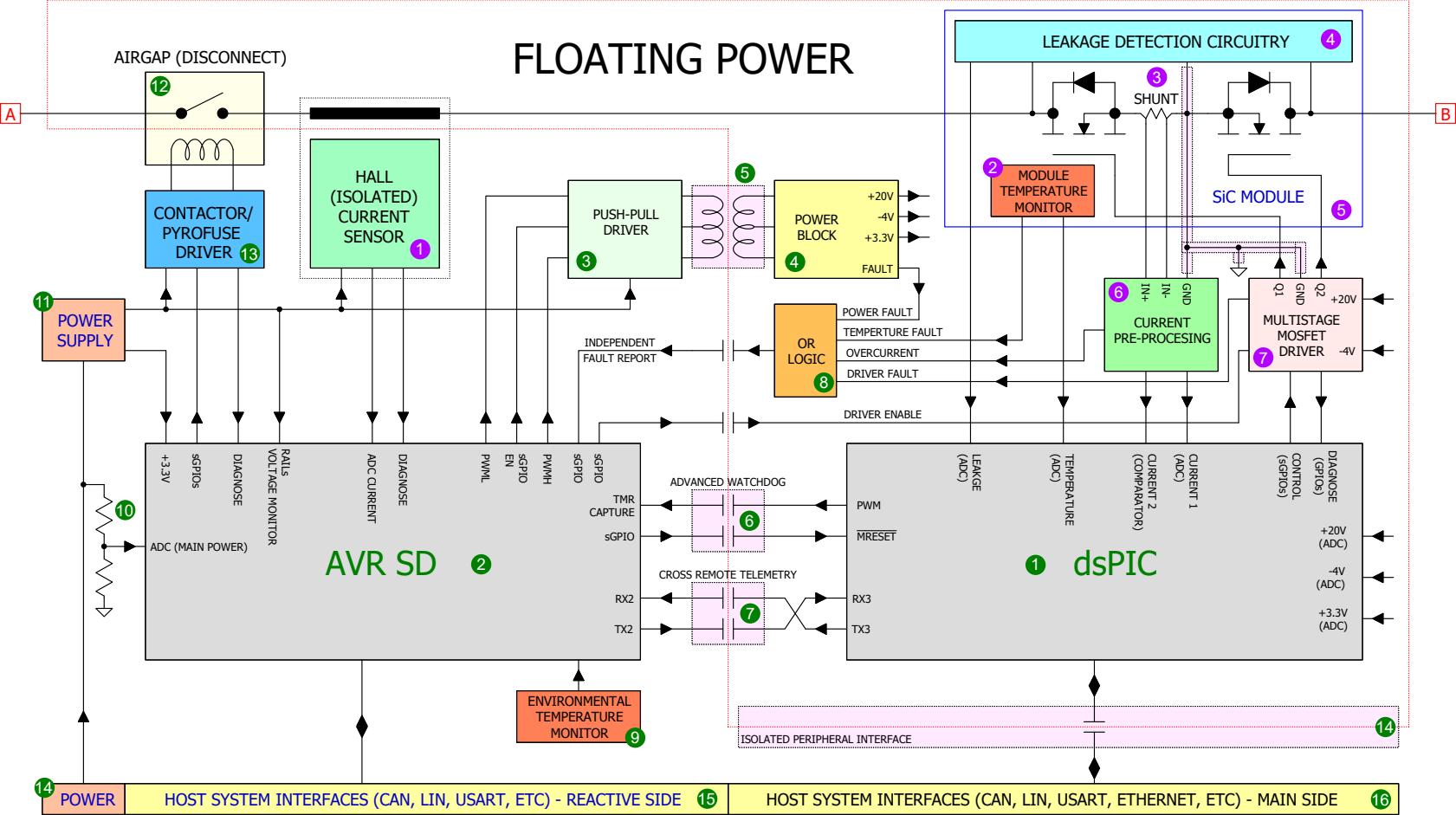
FLOATING POWER
AIRGAP (DISCONNECT)
A
B
LEAKAGE DETECTION CIRCUITRY
SHUNT
MODULE TEMPERATURE MONITOR
SiC MODULE
CONTACTOR/ PYROFUSE DRIVER
HALL (ISOLATED) CURRENT SENSOR
PUSH-PULL DRIVER
POWER BLOCK
+20V
-4V
+3.3V
FAULT
POWER SUPPLY
POWER FAULT
TEMPERTURE FAULT
OVERCURRENT
DRIVER FAULT
OR LOGIC
INDEPENDENT FAULT REPORT
CURRENT PRE-PROCESING
IN+
IN-
GND
MULTISTAGE MOSFET DRIVER
Q1
GND
Q2
+20V
-4V
DRIVER ENABLE
+3.3V
sGPIOs
DIAGNOSE
RAILs VOLTAGE MONITOR
ADC CURRENT
DIAGNOSE
PWML
EN
sGPIO
PWMH
sGPIO
sGPIO
ADC (MAIN POWER)
AVR SD
TMR CAPTURE
sGPIO
RX2
TX2
ADVANCED WATCHDOG
CROSS REMOTE TELEMETRY
PWM
MRESET
RX3
TX3
LEAKGE (ADC)
TEMPERATURE (ADC)
CURRENT 2 (COMPARATOR)
CURRENT 1 (ADC)
CONTROL (sGPIOs)
DIAGNOSE (GPIOs)
+20V (ADC)
-4V (ADC)
+3.3V (ADC)
dsPIC
ENVIRONMENTAL TEMPERATURE MONITOR
ISOLATED PERIPHERAL INTERFACE
POWER
HOST SYSTEM INTERFACES (CAN, LIN, USART, ETC) - REACTIVE SIDE
HOST SYSTEM INTERFACES (CAN, LIN, USART, ETHERNET, ETC) - MAIN SIDE