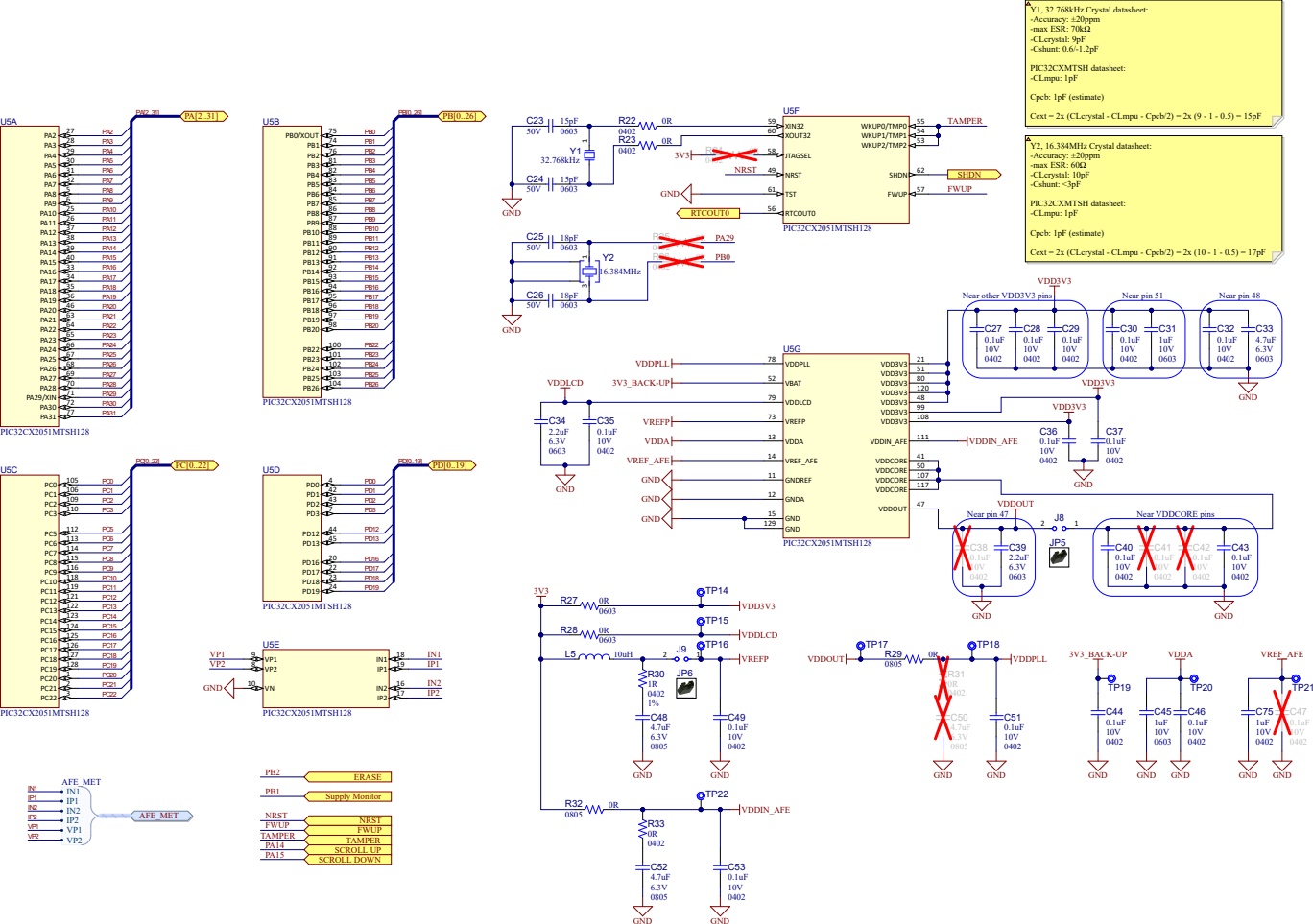
Y1, 32.768kHz Crystal datasheet:
-Accuracy: ±20ppm
-max ESR: 70kΩ
-CLcrystal: 9pF
-Cshunt: 0.6/-1.2pF
PIC32CXMTSH datasheet:
-CLmpu: 1pF
Cpcb: 1pF (estimate)
Cext = 2x (CLcrystal - CLmpu - Cpcb/2) = 2x (9 - 1 - 0.5) = 15pF
Y2, 16.384MHz Crystal datasheet:
-Accuracy: ±20ppm
-max ESR: 60Ω
-CLcrystal: 10pF
-Cshunt: <3pF
PIC32CXMTSH datasheet:
-CLmpu: 1pF
Cpcb: 1pF (estimate)
Cext = 2x (CLcrystal - CLmpu - Cpcb/2) = 2x (10 - 1 - 0.5) = 17pF
U5A
PIC32CX2051MTSH128
U5B
PIC32CX2051MTSH128
U5C
PIC32CX2051MTSH128
U5D
PIC32CX2051MTSH128
U5E
PIC32CX2051MTSH128
U5F
PIC32CX2051MTSH128
U5G
PIC32CX2051MTSH128
PA[2..31]
PB[0..26]
PC[0..22]
PD[0..19]
Y1
32.768kHz
Y2
16.384MHz
C23 15pF 50V 0603
C24 15pF 50V 0603
C25 18pF 50V 0603
C26 18pF 50V 0603
R22 0R 0402
R23 0R 0402
3V3
NRST
GND
RTCOUT0
TAMPER
SHDN
FWUP
PA29
PB0
VDD3V3
Near other VDD3V3 pins
Near pin 51
Near pin 48
C27 0.1uF 10V 0402
C28 0.1uF 10V 0402
C29 0.1uF 10V 0402
C30 0.1uF 10V 0402
C31 1uF 10V 0603
C32 0.1uF 10V 0402
C33 4.7uF 6.3V 0603
VDDPLL
3V3_BACK-UP
VDDLCD
C34 2.2uF 6.3V 0603
C35 0.1uF 10V 0402
VREFP
VDDA
VREF_AFE
VDDIN_AFE
C36 0.1uF 10V 0402
C37 0.1uF 10V 0402
VDDOUT
Near pin 47
J8
JP5
Near VDDCORE pins
C38 0.1uF 10V 0402
C39 2.2uF 6.3V 0603
C40 0.1uF 10V 0402
C41 0.1uF 10V 0402
C42 0.1uF 10V 0402
C43 0.1uF 10V 0402
R27 0R 0603
R28 0R 0603
L5 10uH
J9
JP6
TP14
TP15
TP16
VDD3V3
VDDLCD
VREFP
R30 1R 0402 1%
C48 4.7uF 6.3V 0805
C49 0.1uF 10V 0402
TP17
TP18
R29 0R 0805
R31 0R 0402
C50 4.7uF 6.3V 0805
C51 0.1uF 10V 0402
TP19
TP20
TP21
C44 0.1uF 10V 0402
C45 1uF 10V 0603
C46 0.1uF 10V 0402
C75 1uF 10V 0402
C47 0.1uF 10V 0402
R32 0R 0805
TP22
VDDIN_AFE
R33 0R 0402
C52 4.7uF 6.3V 0805
C53 0.1uF 10V 0402
VP1
VP2
IN1
IP1
IN2
IP2
AFE_MET
PB2
ERASE
PB1
Supply Monitor
NRST
FWUP
TAMPER
PA14
SCROLL UP
PA15
SCROLL DOWN