Block Diagram

(Top Level Schematic)

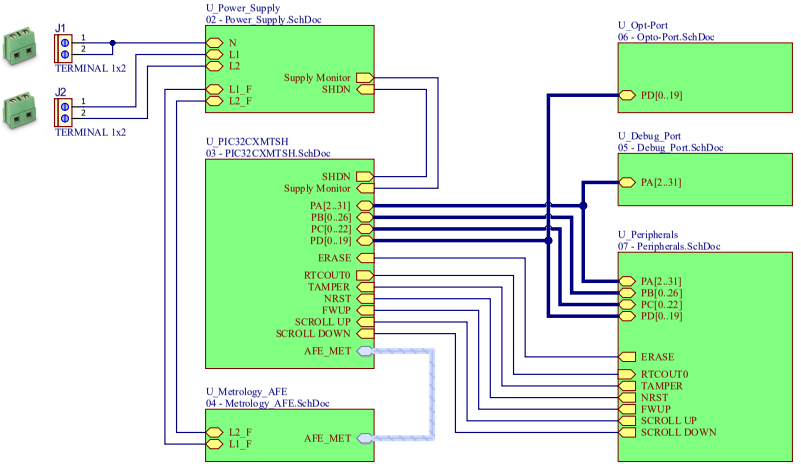

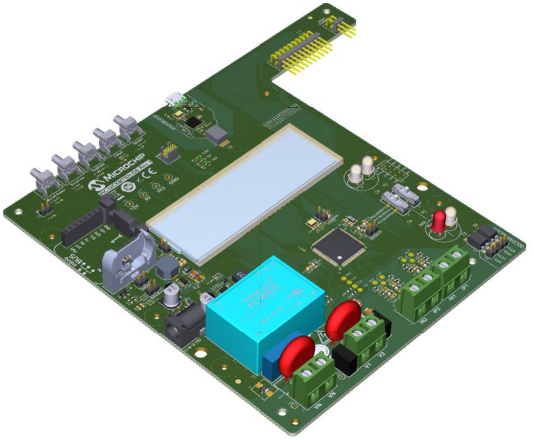

Kit's Accessories

Enclosure & Fixing

LABEL1

[ASSY# / REV]
SN: [SERIAL]
[DATE yyyy.mm.dd]

PCBA LABEL 18X6mm

FIDUCIAL ROUND PCB 1mm SMD

FD1
FD2
FD3
FD4

JUMPERS CONFIGURATION

PAGE	DESIGNATOR	DEFAULT	FUNCTION
2	J4	Closed	3.3Volts current measurement
2	J5	Closed	5Volts current measurement
2	J6	Open	To enable 3.3V & 5V converters
2	J7	Closed	3V3_BACK-UP current measurement
3	J8	Closed	VDDOUT current measurement
3	J9	Closed	VREFP current measurement
7	J15	Open	Erases PIC32CXMTSH firmware code (closed=erase at power-up)