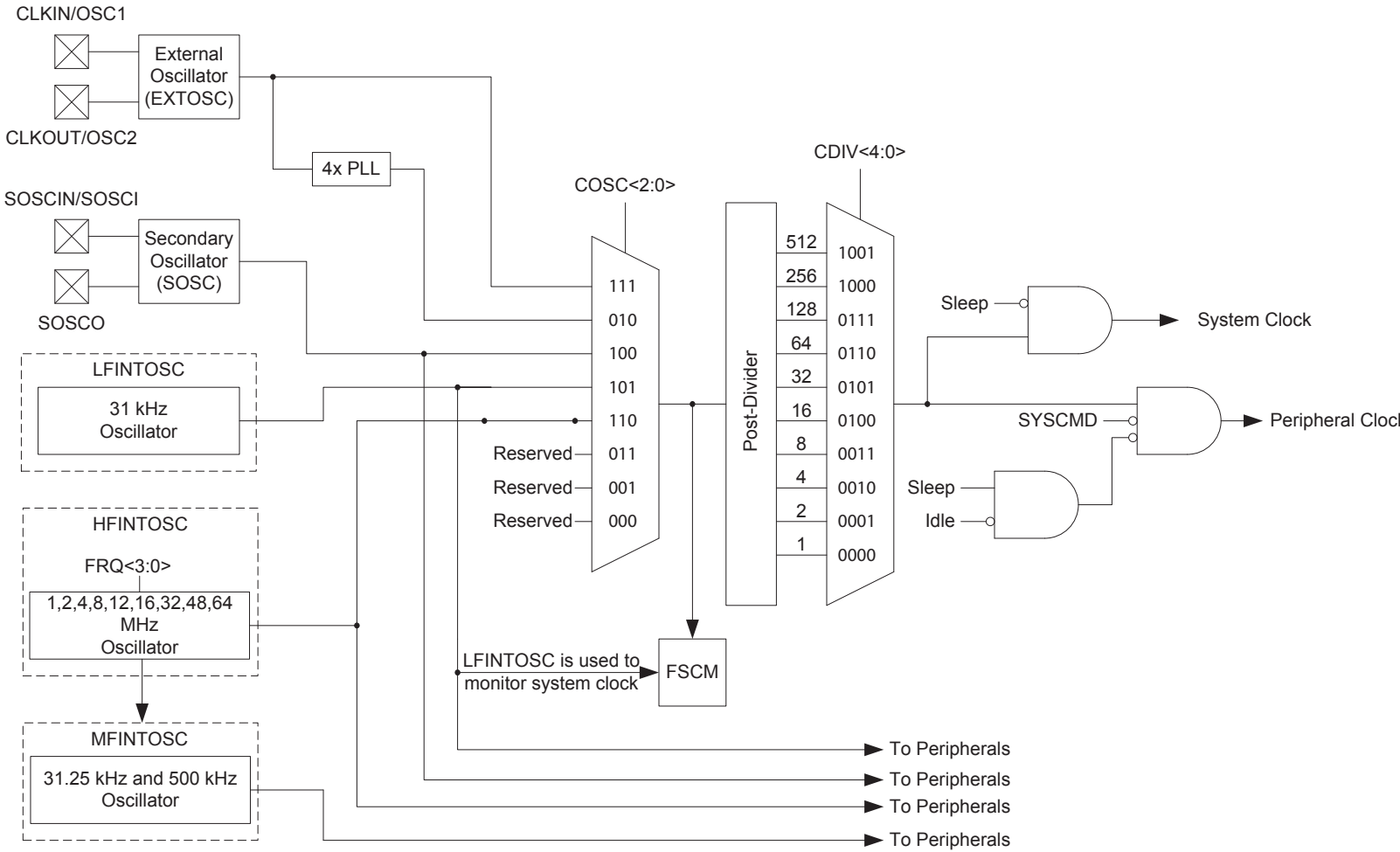Rev. 10-000208D
5/10/2016