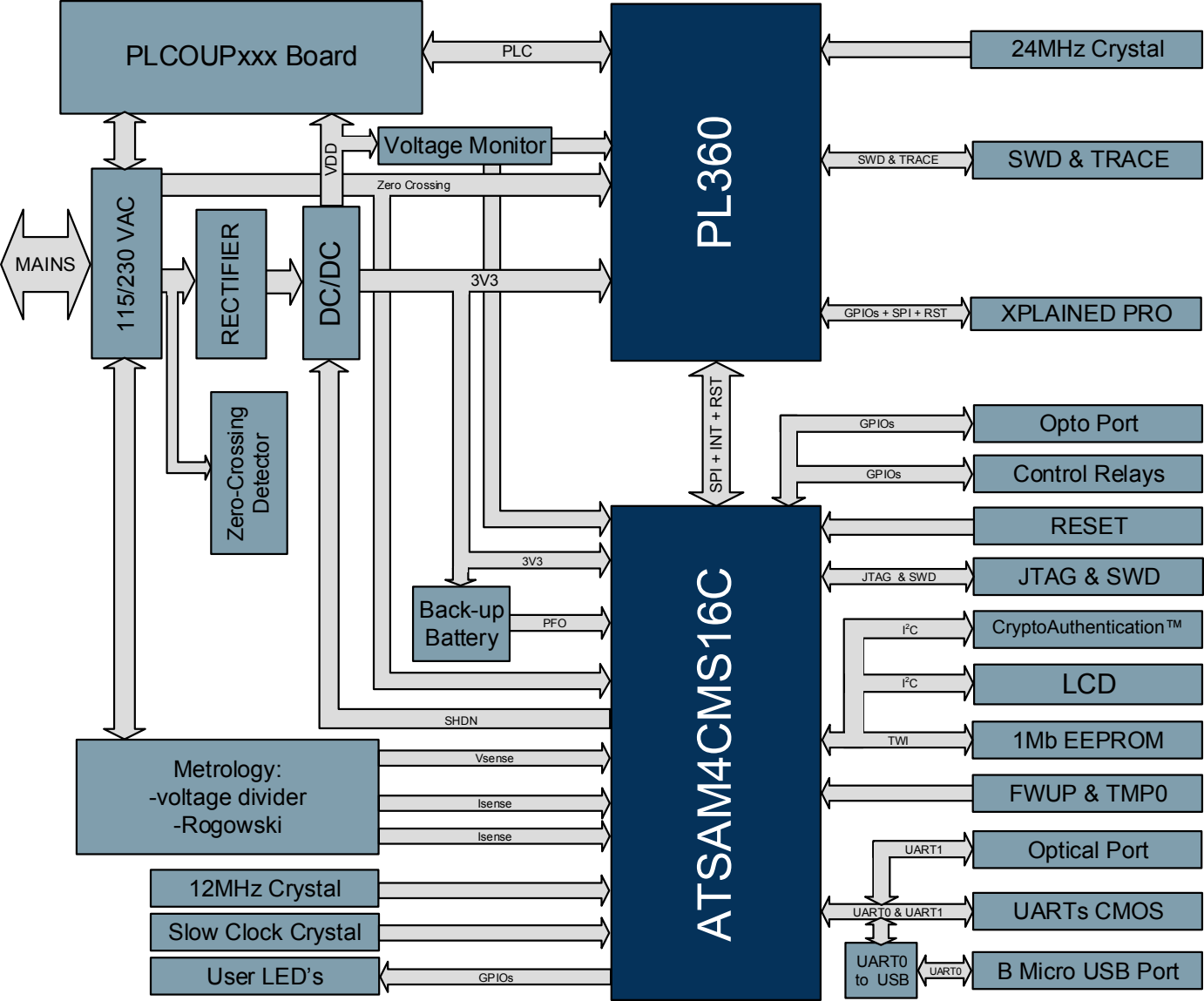
PLCOUPxxx Board
PLC
PL360
24MHz Crystal
Voltage Monitor
VDD
SWD & TRACE
SWD & TRACE
Zero Crossing
MAINS
115/230 VAC
RECTIFIER
DC/DC
3V3
GPIOs + SPI + RST
XPLAINED PRO
SPI + INT + RST
Zero-Crossing Detector
GPIOs
Opto Port
GPIOs
Control Relays
RESET
3V3
JTAG & SWD
JTAG & SWD
Back-up Battery
PFO
I²C
CryptoAuthentication™
I²C
LCD
SHDN
TWI
1Mb EEPROM
ATSAM4CMS16C
Metrology:
-voltage divider
-Rogowski
Vsense
Isense
Isense
FWUP & TMP0
UART1
Optical Port
12MHz Crystal
UART0 & UART1
UARTs CMOS
Slow Clock Crystal
UART0 to USB
UART0
B Micro USB Port
User LED's
GPIOs