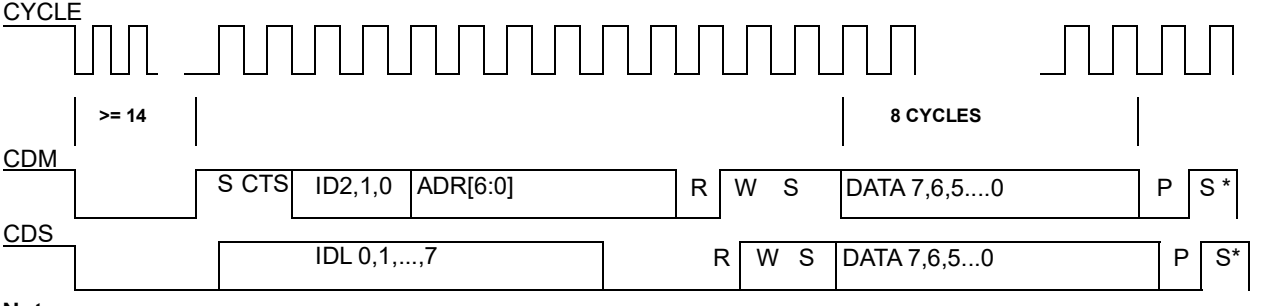
CYCLE
>= 14
8 CYCLES
CDM
S CTS
ID2,1,0
ADR[6:0]
R
W S
DATA 7,6,5....0
P
S *
CDS
IDL 0,1,...,7
R
W S
DATA 7,6,5...0
P
S*

Note: