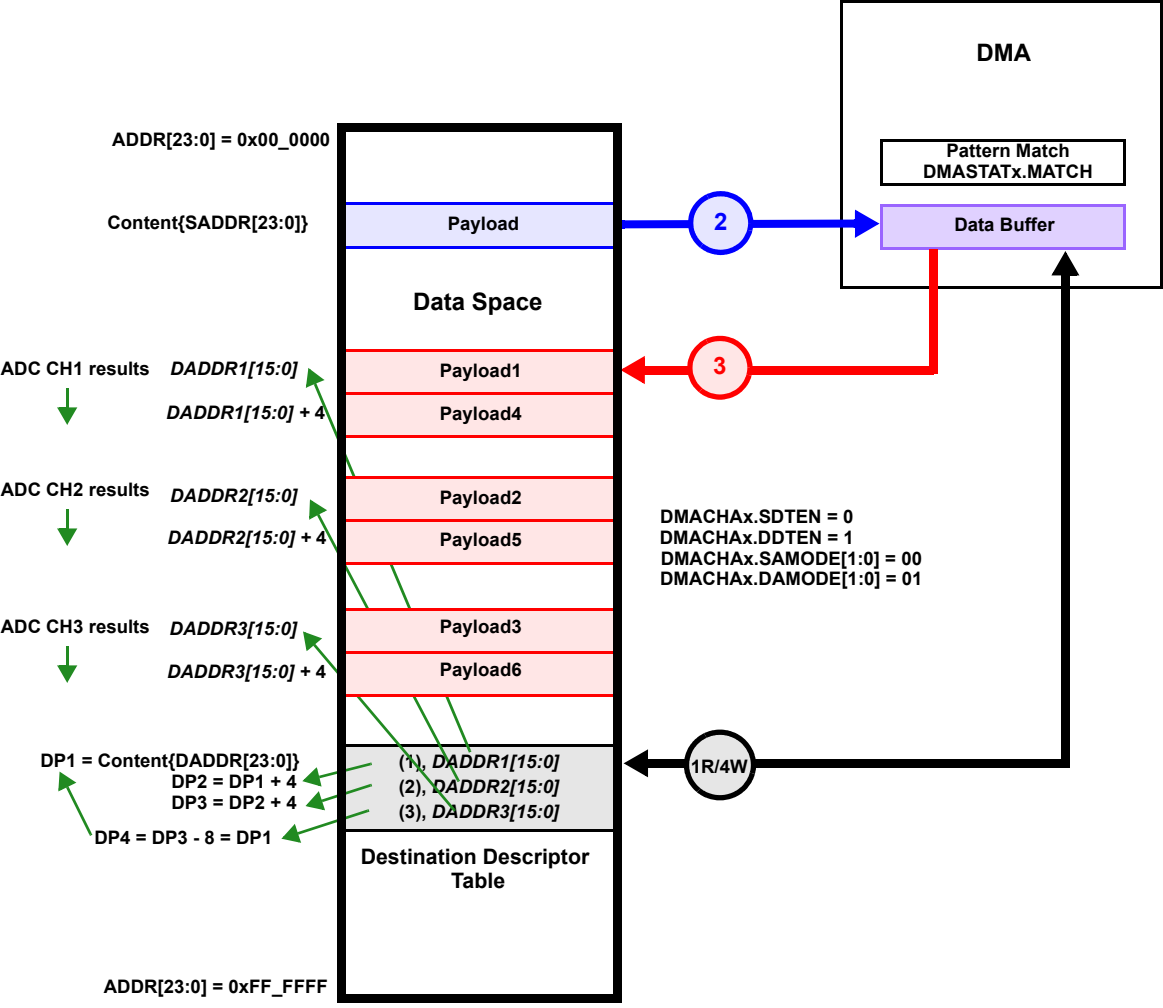
DMA
Pattern Match
DMASTATx.MATCH
Data Buffer
ADDR[23:0] = 0x00_0000
Content{SADDR[23:0]}
Payload
2
Data Space
3
ADC CH1 results
DADDR1[15:0]
DADDR1[15:0] + 4
Payload1
Payload4
ADC CH2 results
DADDR2[15:0]
DADDR2[15:0] + 4
Payload2
Payload5
DMACHAx.SDTEN = 0
DMACHAx.DDTEN = 1
DMACHAx.SAMODE[1:0] = 00
DMACHAx.DAMODE[1:0] = 01
ADC CH3 results
DADDR3[15:0]
DADDR3[15:0] + 4
Payload3
Payload6
DP1 = Content{DADDR[23:0]}
DP2 = DP1 + 4
DP3 = DP2 + 4
DP4 = DP3 - 8 = DP1
(1), DADDR1[15:0]
(2), DADDR2[15:0]
(3), DADDR3[15:0]
1R/4W
Destination Descriptor Table
ADDR[23:0] = 0xFF_FFFF