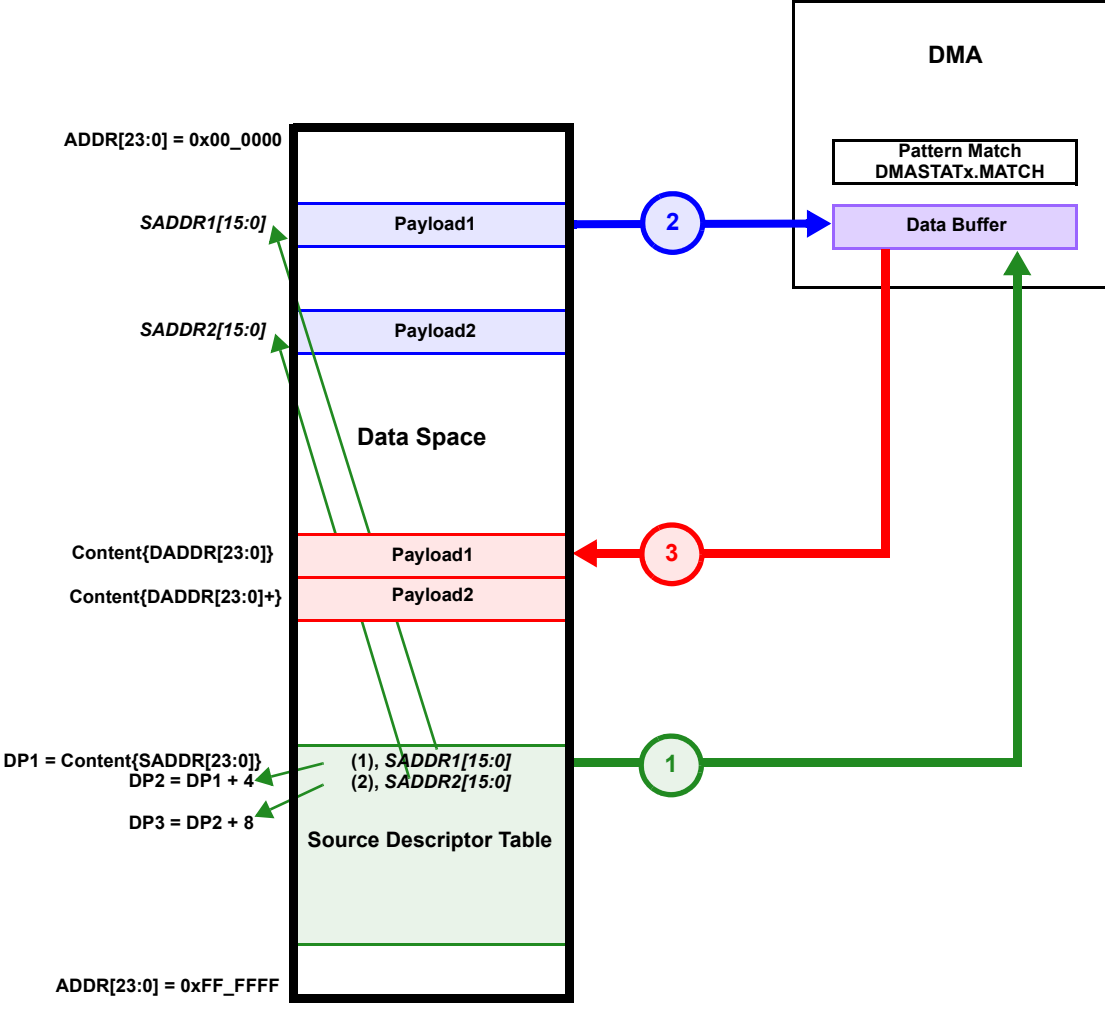
DMA
Pattern Match
DMASTATx.MATCH
Data Buffer
ADDR[23:0] = 0x00_0000
SADDR1[15:0]
Payload1
2
SADDR2[15:0]
Payload2
Data Space
Content{DADDR[23:0]}
Payload1
3
Content{DADDR[23:0]+}
Payload2
DP1 = Content{SADDR[23:0]}
DP2 = DP1 + 4
DP3 = DP2 + 8
(1), SADDR1[15:0]
(2), SADDR2[15:0]
1
Source Descriptor Table
ADDR[23:0] = 0xFF_FFFF