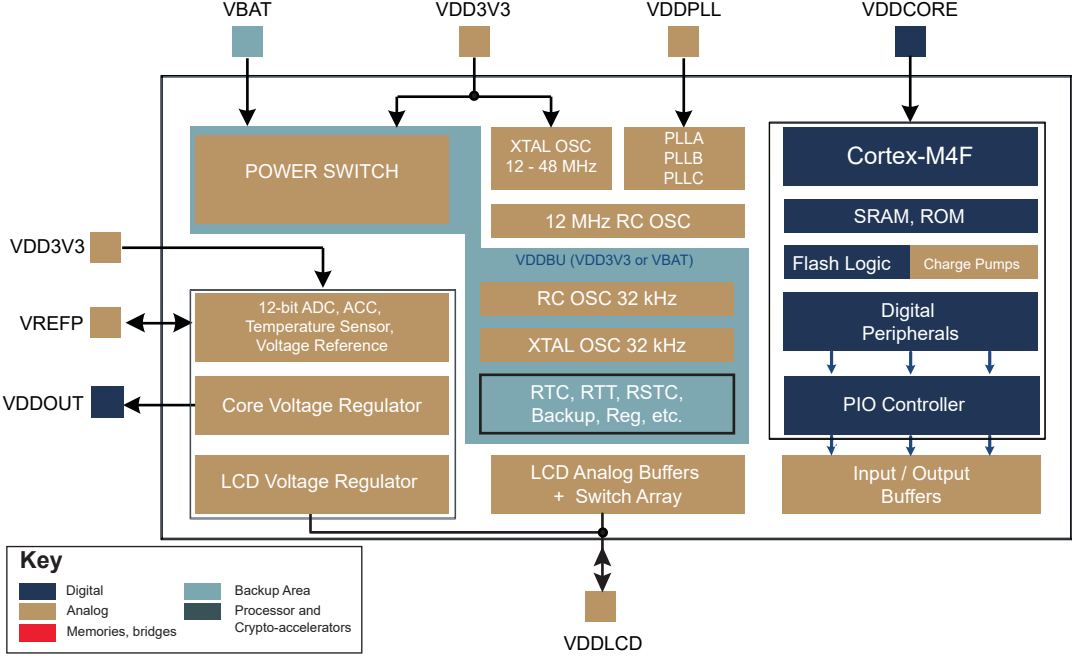
VBAT
VDD3V3
VDDPLL
VDDCORE
POWER SWITCH
XTAL OSC
12 - 48 MHz
PLLA
PLLB
PLLC
12 MHz RC OSC
VDDBU (VDD3V3 or VBAT)
RC OSC 32 kHz
XTAL OSC 32 kHz
RTC, RTT, RSTC,
Backup, Reg, etc.
Cortex-M4F
SRAM, ROM
Flash Logic
Charge Pumps
Digital
Peripherals
PIO Controller
VDD3V3
VREFP
VDDOUT
12-bit ADC, ACC,
Temperature Sensor,
Voltage Reference
Core Voltage Regulator
LCD Voltage Regulator
LCD Analog Buffers
+ Switch Array
Input / Output
Buffers
VDDLCD
Key
Digital
Analog
Memories, bridges
Backup Area
Processor and
Crypto-accelerators