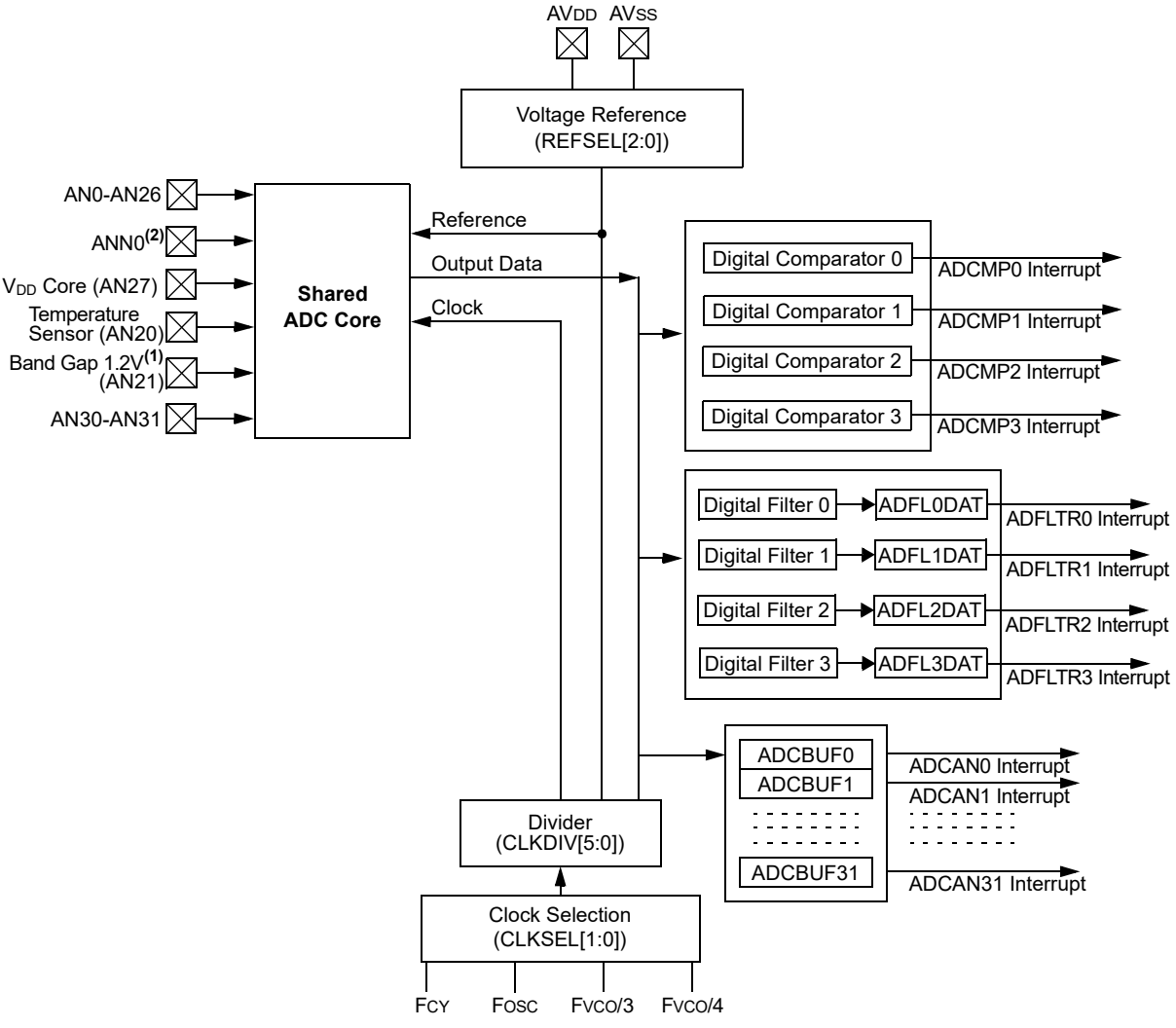
AVDD
AVSS
Voltage Reference
(REFSEL[2:0])
AN0-AN26
ANN0(2)
VDD Core (AN27)
Temperature
Sensor (AN20)
Band Gap 1.2V(1)
(AN21)
AN30-AN31
Shared
ADC Core
Reference
Output Data
Clock
Digital Comparator 0
Digital Comparator 1
Digital Comparator 2
Digital Comparator 3
ADCMP0 Interrupt
ADCMP1 Interrupt
ADCMP2 Interrupt
ADCMP3 Interrupt
Digital Filter 0
Digital Filter 1
Digital Filter 2
Digital Filter 3
ADFL0DAT
ADFL1DAT
ADFL2DAT
ADFL3DAT
ADFLTR0 Interrupt
ADFLTR1 Interrupt
ADFLTR2 Interrupt
ADFLTR3 Interrupt
ADCBUF0
ADCBUF1
ADCBUF31
ADCAN0 Interrupt
ADCAN1 Interrupt
ADCAN31 Interrupt
Divider
(CLKDIV[5:0])
Clock Selection
(CLKSEL[1:0])
FCY
FOSC
FVCO/3
FVCO/4