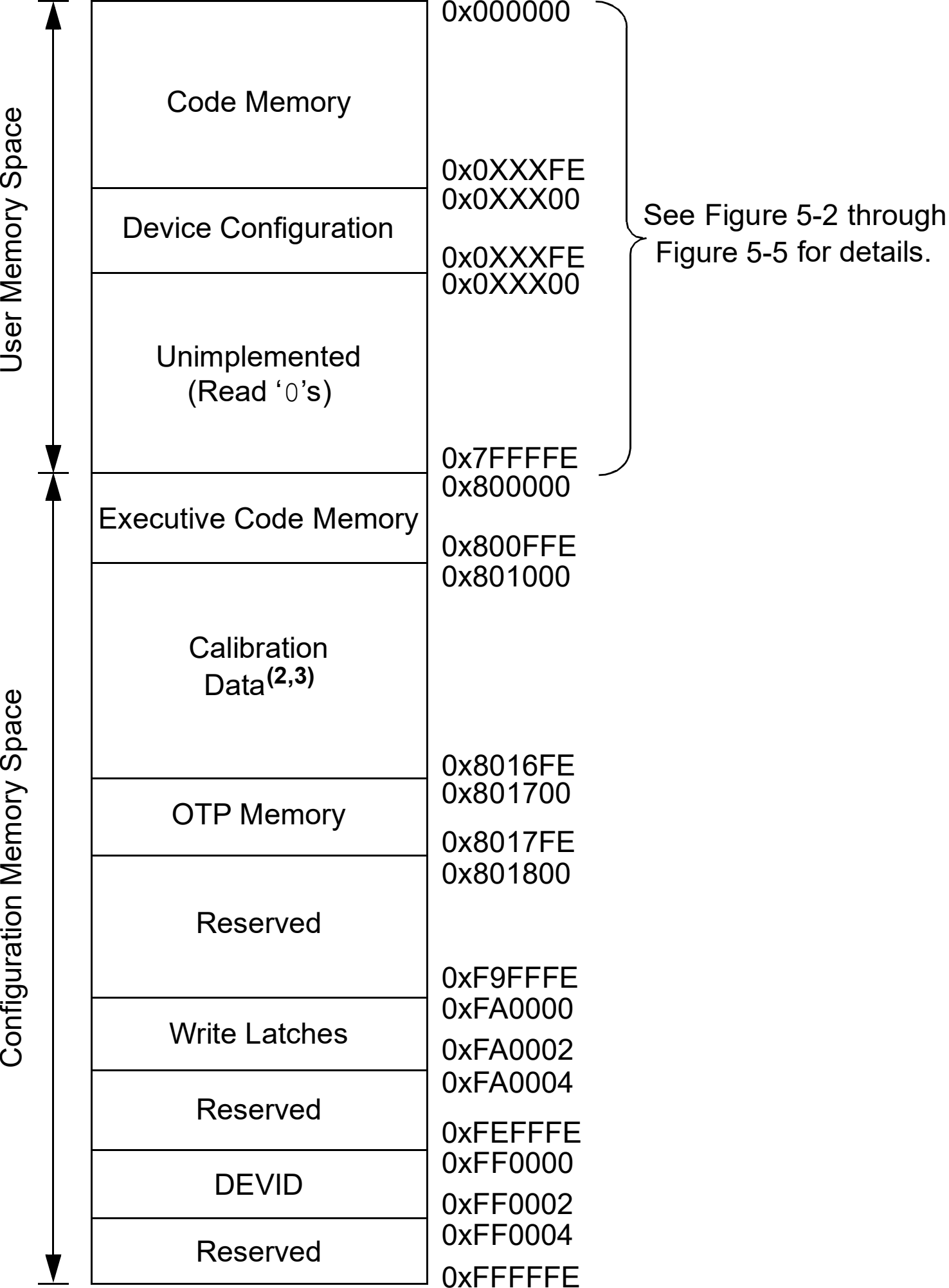
User Memory Space
Configuration Memory Space
Code Memory
Device Configuration
Unimplemented
(Read '0's)
Executive Code Memory
Calibration
Data(2,3)
OTP Memory
Reserved
Write Latches
Reserved
DEVID
Reserved
0x000000
0x0XXXFE
0x0XXX00
0x0XXXFE
0x0XXX00
0x7FFFFE
0x800000
0x800FFE
0x801000
0x8016FE
0x801700
0x8017FE
0x801800
0xF9FFFE
0xFA0000
0xFA0002
0xFA0004
0xFEFFFE
0xFF0000
0xFF0002
0xFF0004
0xFFFFFE
See Figure 5-2 through
Figure 5-5 for details.