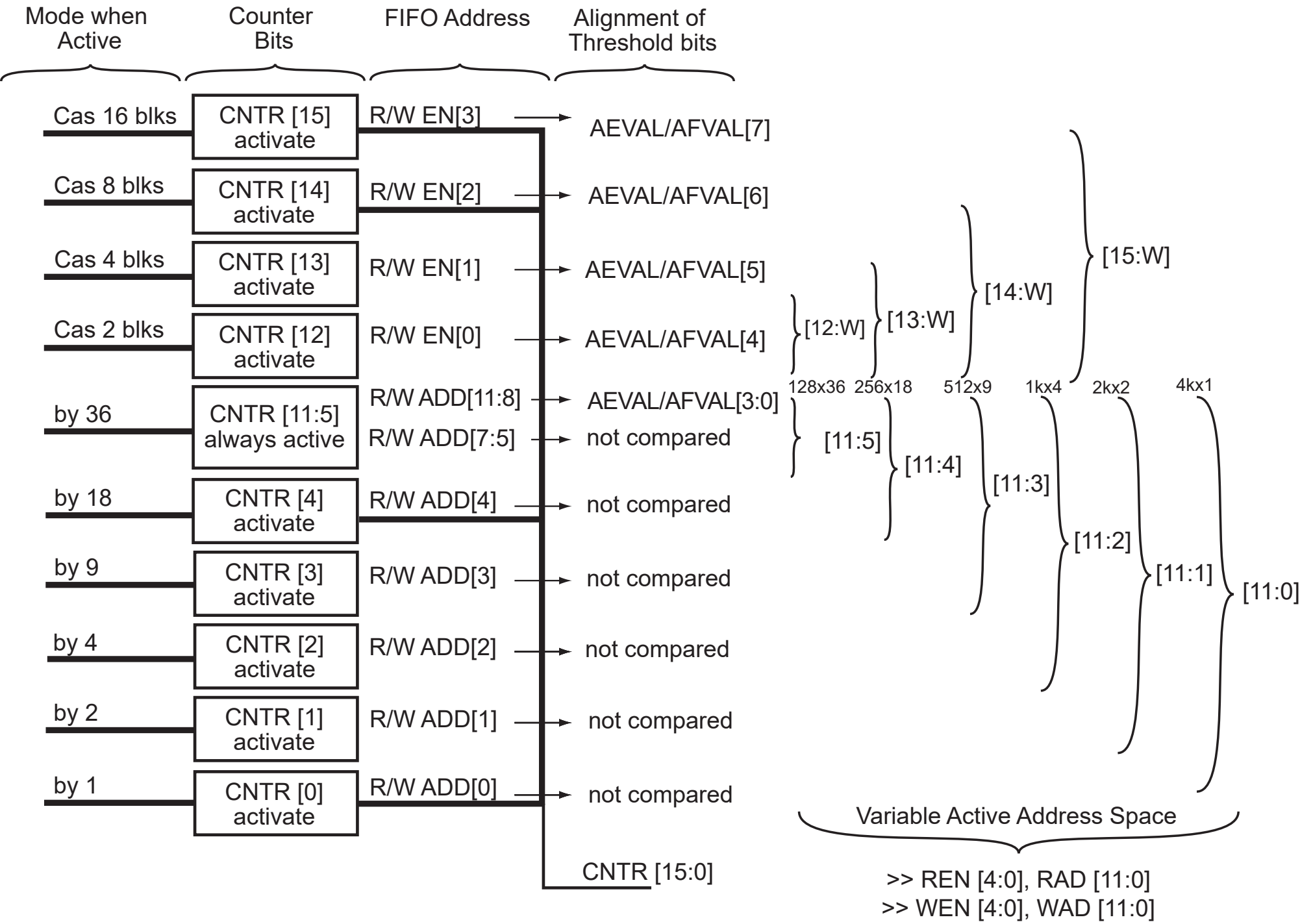FIFO Address Counters