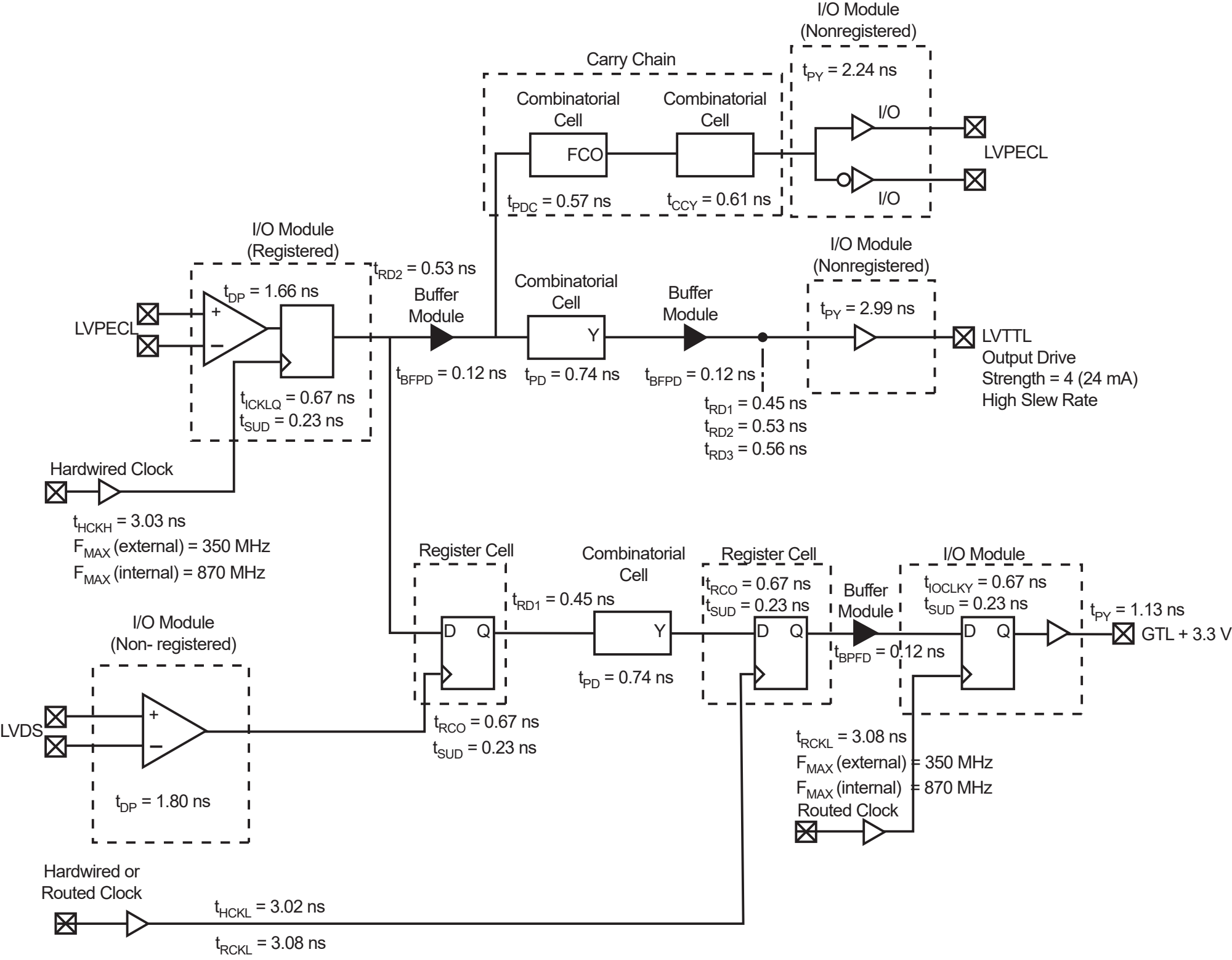
I/O Module
(Nonregistered)
Carry Chain
t_{PY} = 2.24 ns
Combinatorial
Cell
Combinatorial
Cell
I/O
FCO
LVPECL
I/O
t_{PDC} = 0.57 ns
t_{CCY} = 0.61 ns
I/O Module
(Registered)
t_{RD2} = 0.53 ns
t_{DP} = 1.66 ns
Buffer
Module
Combinatorial
Cell
Buffer
Module
I/O Module
(Nonregistered)
t_{PY} = 2.99 ns
LVPECL
Y
LVTTL
Output Drive
Strength = 4 (24 mA)
High Slew Rate
t_{BFPD} = 0.12 ns
t_{PD} = 0.74 ns
t_{BFPD} = 0.12 ns
t_{ICKLQ} = 0.67 ns
t_{SUD} = 0.23 ns
t_{RD1} = 0.45 ns
t_{RD2} = 0.53 ns
t_{RD3} = 0.56 ns
Hardwired Clock
t_{HCKH} = 3.03 ns
F_{MAX} (external) = 350 MHz
F_{MAX} (internal) = 870 MHz
Register Cell
Combinatorial
Cell
Register Cell
I/O Module
t_{RCO} = 0.67 ns
t_{SUD} = 0.23 ns
Buffer
Module
t_{IOCLKY} = 0.67 ns
t_{SUD} = 0.23 ns
t_{RD1} = 0.45 ns
t_{PY} = 1.13 ns
D Q
Y
D Q
D Q
GTL + 3.3 V
t_{BPFD} = 0.12 ns
t_{PD} = 0.74 ns
I/O Module
(Non- registered)
LVDS
t_{RCO} = 0.67 ns
t_{SUD} = 0.23 ns
t_{RCKL} = 3.08 ns
F_{MAX} (external) = 350 MHz
F_{MAX} (internal) = 870 MHz
Routed Clock
t_{DP} = 1.80 ns
Hardwired or
Routed Clock
t_{HCKL} = 3.02 ns
t_{RCKL} = 3.08 ns