56-ball Wafer Level Chip Scale Package (FZB) - 3.170x3.444x0.483 mm Body [WLCSP] Atmel Legacy GPC GBL

Note: For the most current package drawings, please see the Microchip Packaging Specification located at http://www.microchip.com/packaging

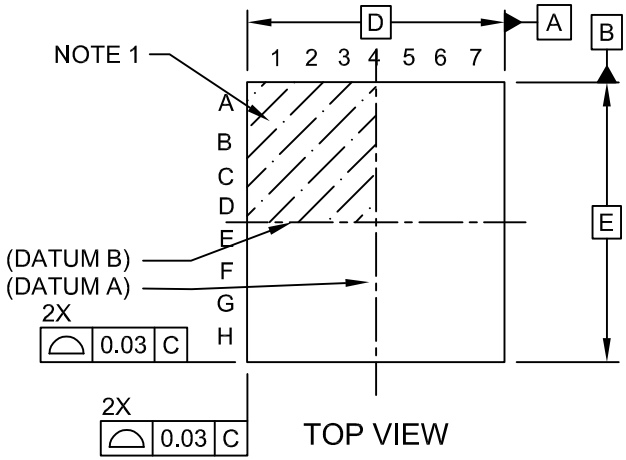

TOP VIEW

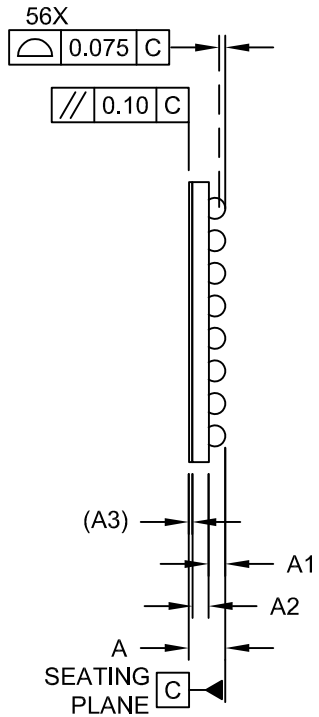

SIDE VIEW

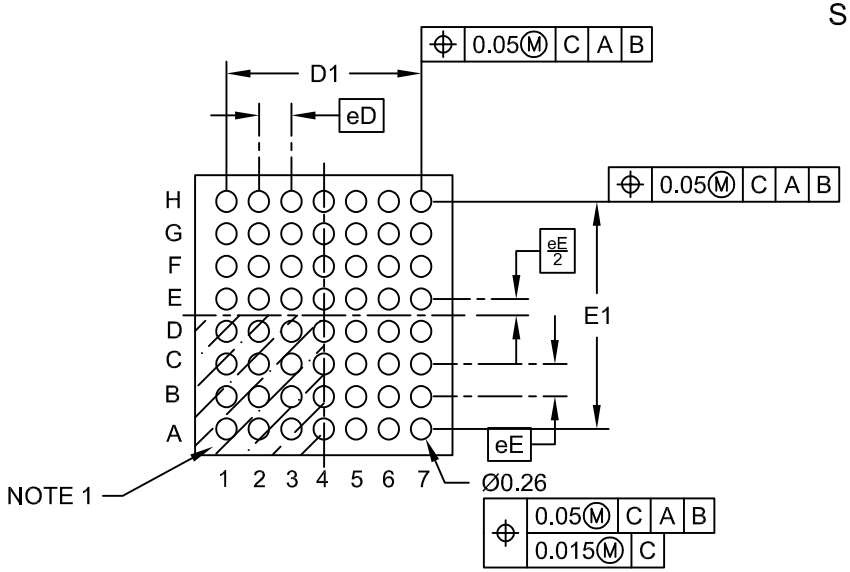

BOTTOM VIEW