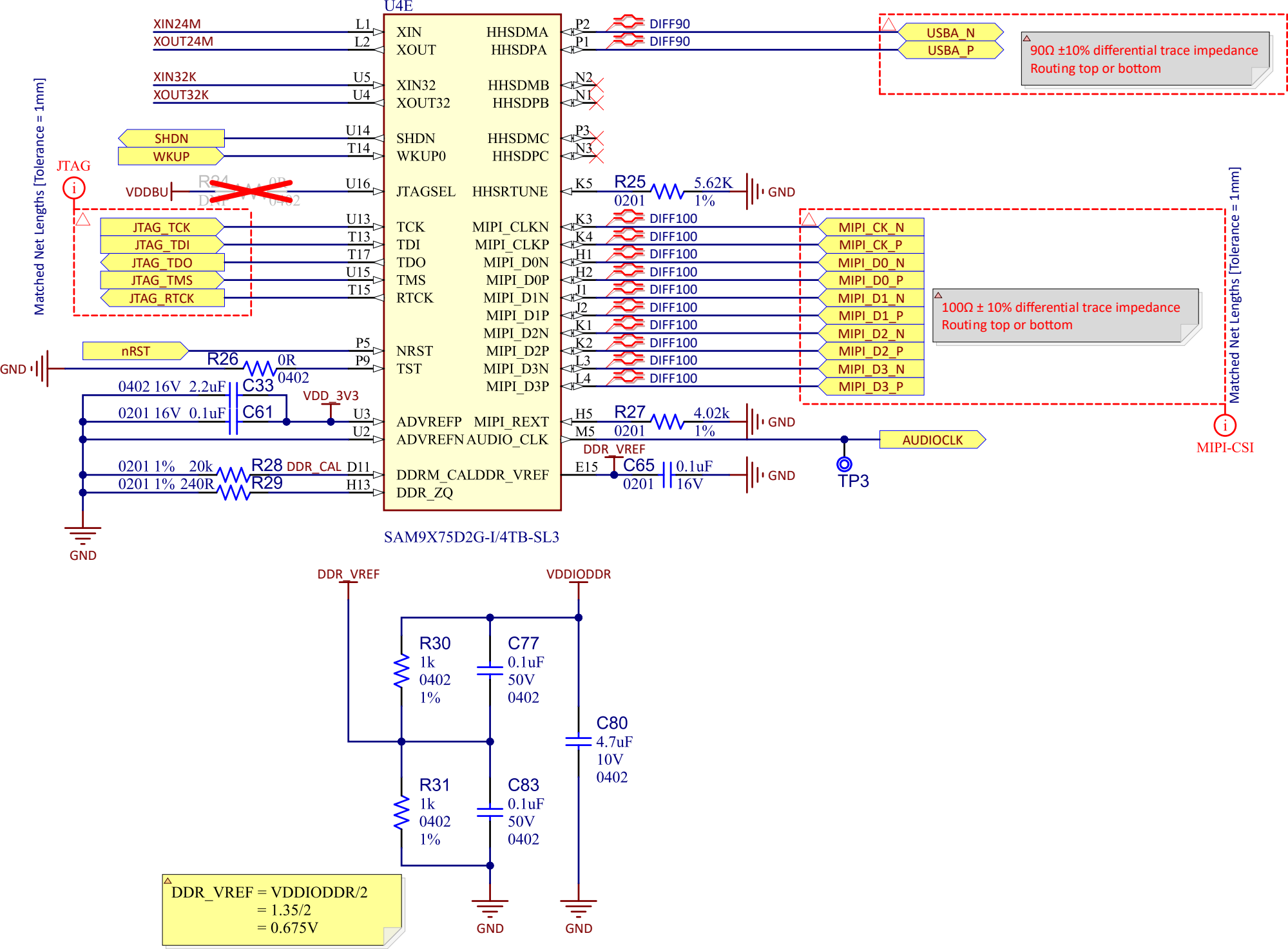
U4E
XIN24M
XOUT24M
XIN32K
XOUT32K
SHDN
WKUP
VDDBU
JTAG
JTAG_TCK
JTAG_TDI
JTAG_TDO
JTAG_TMS
JTAG_RTCK
nRST
GND
XIN
XOUT
XIN32
XOUT32
SHDN
WKUP0
JTAGSEL
TCK
TDI
TDO
TMS
RTCK
NRST
TST
ADVREFP
ADVREFN
DDRM_CAL
DDR_ZQ
HHSDMA
HHSDPA
HHSDMB
HHSDPB
HHSDMC
HHSDPC
HHSRTUNE
MIPI_CLKN
MIPI_CLKP
MIPI_D0N
MIPI_D0P
MIPI_D1N
MIPI_D1P
MIPI_D2N
MIPI_D2P
MIPI_D3N
MIPI_D3P
MIPI_REXT
AUDIO_CLK
DDR_VREF
DIFF90
DIFF100
USBA_N
USBA_P
90Ω ±10% differential trace impedance
Routing top or bottom
R25 0201 5.62K 1%
R26 0R 0402
C33 0402 16V 2.2uF
C61 0201 16V 0.1uF
VDD_3V3
R27 0201 4.02k 1%
C65 0201 0.1uF 16V
R28 0201 1% 20k
R29 0201 1% 240R
DDR_CAL
AUDIOCLK
TP3
MIPI_CK_N
MIPI_CK_P
MIPI_D0_N
MIPI_D0_P
MIPI_D1_N
MIPI_D1_P
MIPI_D2_N
MIPI_D2_P
MIPI_D3_N
MIPI_D3_P
100Ω ± 10% differential trace impedance
Routing top or bottom
Matched Net Lengths [Tolerance = 1mm]
MIPI-CSI
SAM9X75D2G-I/4TB-SL3
DDR_VREF
VDDIODDR
R30 1k 0402 1%
C77 0.1uF 50V 0402
C80 4.7uF 10V 0402
R31 1k 0402 1%
C83 0.1uF 50V 0402
DDR_VREF = VDDIODDR/2
= 1.35/2
= 0.675V