USB To JTAG & UART Bridge

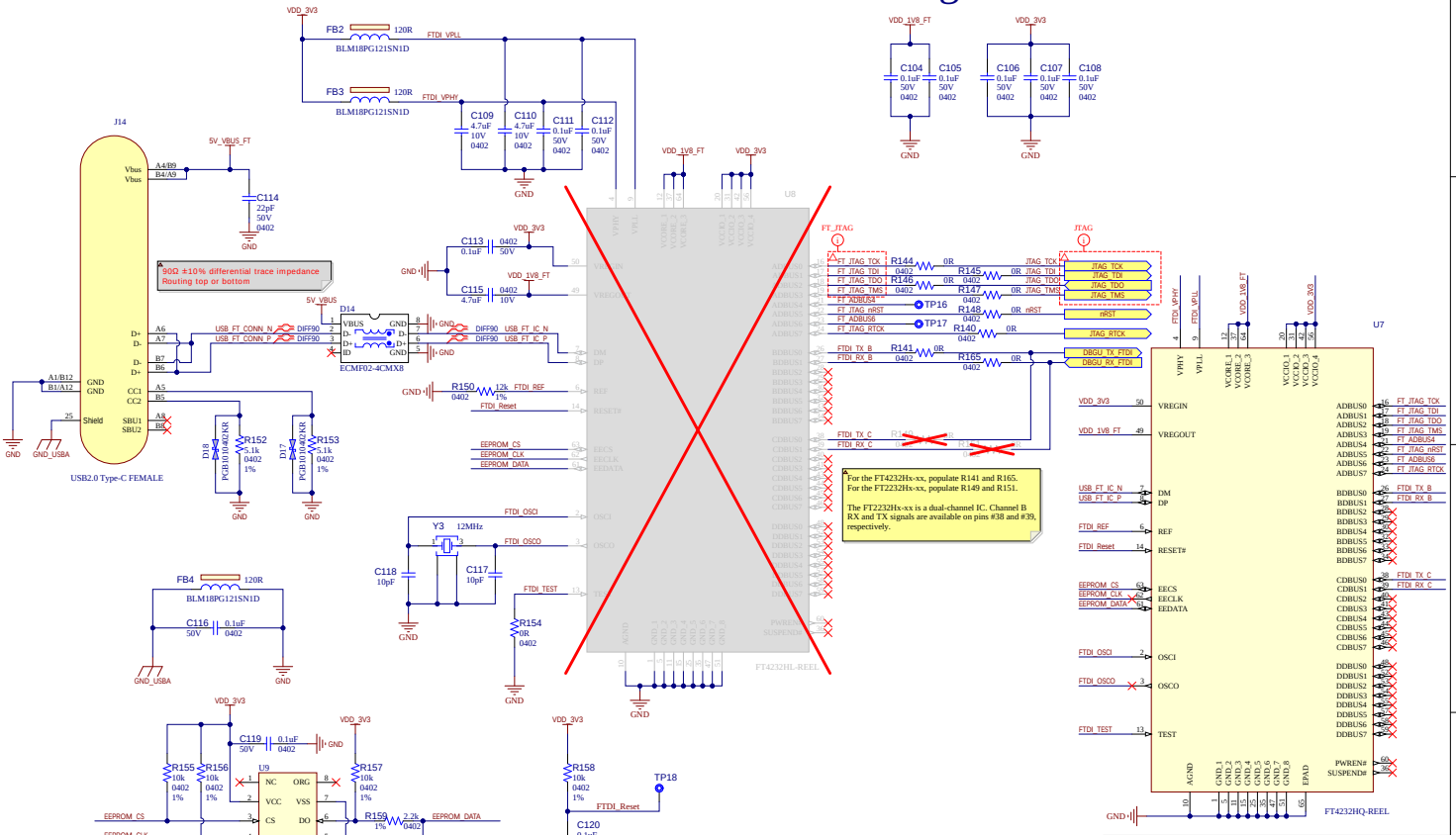

Project Owner: 178352	MICROCHIP
PCB Layout Contact: 178352	
PartNumber: 02-01799	Project Title: SAM9X75 Curiosity Hybrid Evaluation Board — Variant: FT4232HQ
Sheet Title: USB To JTAG & UART Bridge	Designed with Altium — Altium.com
Size: A3 — SCH #: 02-01799 Rev: 2 — PCB #: 04-12778 Rev: 2	Date: 6 Jul 2026 — Sheet 14 of 14
File: 13 - USB_To_JTAG_UART_Bridge.SchDoc	