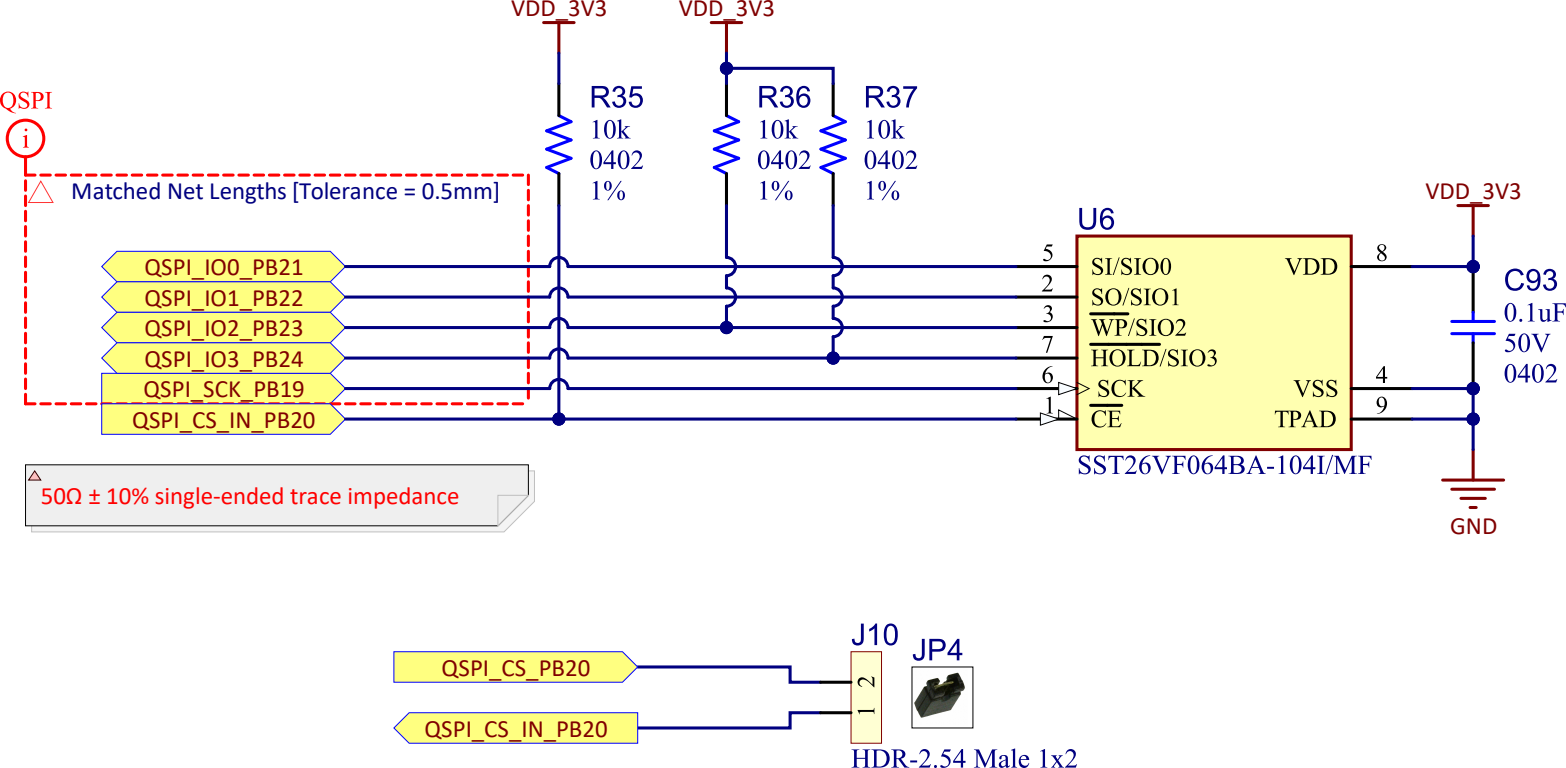
VDD_3V3
VDD_3V3
QSPI
R35
10k
0402
1%
R36
10k
0402
1%
R37
10k
0402
1%
Matched Net Lengths [Tolerance = 0.5mm]
QSPI_IO0_PB21
QSPI_IO1_PB22
QSPI_IO2_PB23
QSPI_IO3_PB24
QSPI_SCK_PB19
QSPI_CS_IN_PB20
U6
SI/SIO0
SO/SIO1
WP/SIO2
HOLD/SIO3
SCK
CE
VDD
VSS
TPAD
SST26VF064BA-104I/MF
VDD_3V3
C93
0.1uF
50V
0402
GND
50Ω ± 10% single-ended trace impedance
QSPI_CS_PB20
QSPI_CS_IN_PB20
J10
JP4
HDR-2.54 Male 1x2