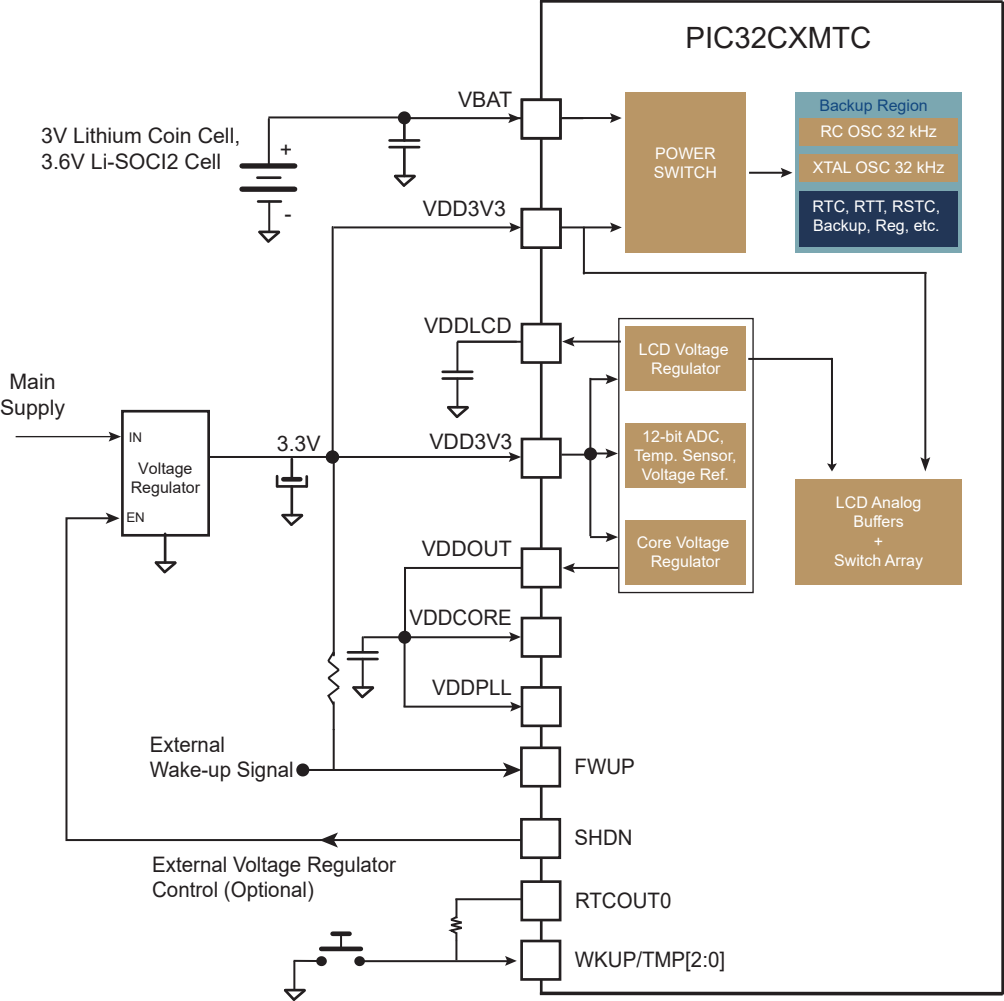
PIC32CXMTC
VBAT
3V Lithium Coin Cell,
3.6V Li-SOCI2 Cell
+
-
POWER SWITCH
Backup Region
RC OSC 32 kHz
XTAL OSC 32 kHz
RTC, RTT, RSTC, Backup, Reg, etc.
VDD3V3
VDDLCD
LCD Voltage Regulator
Main Supply
IN
Voltage Regulator
EN
3.3V
VDD3V3
12-bit ADC, Temp. Sensor, Voltage Ref.
LCD Analog Buffers + Switch Array
VDDOUT
Core Voltage Regulator
VDDCORE
VDDPLL
External Wake-up Signal
FWUP
SHDN
External Voltage Regulator Control (Optional)
RTCOUT0
WKUP/TMP[2:0]